City of Griffin Unified Development Code
Table of Contents

LIST OF FIGURES 7

LIST OF TABLES 9

Preface 10

Article 1. INTRODUCTION AND AUTHORITY 11

101. TITLE 11

Article 2. INTERPRETATIONS AND DEFINITIONS 15

201. INTERPRETATION OF CERTAIN TERMS AND WORDS 15

202. DEFINITIONS 15

Article 3. ESTABLISHMENT, FUNCTIONS, AND ADMINISTRATION 39

301. INTRODUCTION 39

302. ZONING ADMINISTRATOR 39

303. PLANNING AND ZONING BOARD 39

304. BOARD OF COMMISSIONERS 41

305. CONFLICT OF INTEREST DISCLOSURE AFFIDAVIT 41

Article 4. PROCEDURES 42

401. SUBMITTAL REQUIREMENTS FOR ALL BUILDING, DEVELOPMENT AND ZONING APPLICANTS 42

402. PLAN REVIEW 42

403. SUBDIVISION AND THE CREATION OF NEW LOTS (COMBINATION AND/OR DIVISION) 43

404. AMENDMENTS 43

405. REZONING EVALUATION CRITERIA 45

406. SPECIAL USES 46

407. ANNEXATION 46

408. PUBLIC HEARINGS 47

409. MEETINGS 48

410. VARIANCES 49

411. REVOCATION OF APPROVAL 50

412. RECORDS AND MINUTES OF PROCEEDINGS 50

413. DEVELOPMENTS OF REGIONAL IMPACT 50

414. APPEAL OF DECISIONS 51

Article 5. USE PROVISIONS: PERMITTED, SPECIAL, ACCESSORY AND NONCONFORMING 52
501. GENERAL 52
502. PERMITTED AND PROHIBITED USES 52
503. SUPPLEMENTAL REGULATIONS FOR SPECIAL USES 53
504. ACCESSORY USES AND STRUCTURES; TEMPORARY USES 55
505. NONCONFORMING USES AND STRUCTURES 57
Article 6. SITE DESIGN AND ARCHITECTURAL STANDARDS 59
601. YARDS AND STREETSCAPE 59
602. LOCATION OF LOADING DOCKS (REAR OR SIDE) 59
603. INTERPARCEL CONNECTIVITY REQUIREMENT 59
604. BUFFERS, LANDSCAPING, AND OPEN SPACE 59
605. BUILDING FORM, MASSING AND ARCHITECTURE 60
Article 7. ZONING DISTRICTS 66
701. ZONING DISTRICTS RELATION TO COMPREHENSIVE PLAN 66
702. ESTABLISHMENT OF DISTRICTS 66
703. ZONING TO APPLY WHEN LOT IS DIVIDED BY DISTRICT BOUNDARY LINE. 67
704. PERMITTED USES FOR ALL ZONING DISTRICTS 67
705. LOW DENSITY RESIDENTIAL "A" (LDR-A) 73
706. LOW DENSITY RESIDENTIAL "B" (LDR-B) 73
707. LOW DENSITY RESIDENTIAL "C" (LDR-C) 74
708. MEDIUM DENSITY RESIDENTIAL (MDR) 75
709. HIGH DENSITY RESIDENTIAL "A" (HDR-A) 76
710. HIGH DENSITY RESIDENTIAL "B" (HDR-B) 77
711. NEIGHBORHOOD BUSINESS DISTRICT 81
712. PLANNED RESIDENTIAL DEVELOPMENT (PRD) 85
713. CENTRAL BUSINESS DISTRICT (CBD) 93
714. PLANNED COMMERCIAL DEVELOPMENT (PCD) 97
715. PLANNED INDUSTRIAL DEVELOPMENT (PID) 101
716. INSTITUTIONAL (INST.) 105
717. AGRICULTURAL/RESIDENTIAL (AG/R) 109
718. SPECIAL PUBLIC INTEREST OVERLAY DISTRICTS (SPIOD) 113
719. AIRPORT OVERLAY DISTRICT (AOD) 114
720. SPECIAL HOUSING REVITALIZATION OVERLAY DISTRICT (SHROD) 114
721. PLACES OF ASSEMBLY OVERLAY DISTRICT (PAO) 117

722. MIXED USE/TOD OVERLAY DISTRICT 121
723. CONSERVATION SUBDIVISION ZONING OVERLAY DISTRICT 169
724. MEDICAL OVERLAY DISTRICT 173
Article 8. PARKING AND LOADING 185
801. SCOPE OF ARTICLE 185
802. PARKING PLAN REQUIRED 185
803. PARKING AREA DESIGN 185
804. ACCESSIBLE PARKING 186
805. JOINT PARKING FACILITIES 186
806. PAVEMENT MARKINGS AND SIGNS 186
807. NUMBER OF PARKING SPACES 187
808. MAXIMUM PARKING EXCEPTIONS 190
809. MINIMUM NUMBER OF LOADING SPACES REQUIRED 190
Article 9. PARKING LOT LANDSCAPE AND DESIGN 192
901. SCOPE OF REQUIREMENTS AND STANDARDS 192
902. DRAINAGE, CONSTRUCTION AND MAINTENANCE 192
903. SEPARATION FROM WALKWAYS, SIDEWALKS AND STREETS 192
904. PARKING LOT AND OTHER VEHICLE USE AREAS 192
905. PLANT MATERIAL STANDARDS 193
906. MAINTENANCE 194
Article 10. MAPS 195
1001. ESTABLISHMENT OF OFFICIAL ZONING AND OTHER MAPS 195
1002. OFFICIAL ZONING MAP 195
1003. OTHER MAPS 195
Article 11. TREE ORDINANCE 196
Article 12. SIGNS 197
1201. FINDINGS AND PURPOSE 197
1202. AUTHORITY 198
1203. DEFINITIONS 198
1204. APPLICABILITY 201
1205. PROHIBITED SIGNS 201
1206. PERMITS; PROCEDURES 202
1207. PERMIT EXPIRATION 204
1208. DISPLAY OF PERMIT 204

1209. COMPLIANCE WITH TECHNICAL CODES; ZONING 204
1210. REGULATION OF SIGNS BY LAND USE; DEVELOPED RESIDENTIAL PROPERTY 204
1211. REGULATION OF SIGNS BY LAND USE; OTHER DEVELOPED PROPERTY 205
1212. REGULATION OF SIGNS BY LAND USE; VACANT AND UNDEVELOPED PROPERTY 207
1213. REGULATION OF SIGNS BY LAND USE; DOWNTOWN COMMERCIAL HISTORIC DISTRICT 209
1214. REGULATION OF SIGNS BY LAND USE: EMERGING COMMERCIAL CORRIDORS 210
1215. SPECIAL EVENT PERMITS 212
1216. ERECTING SIGNS WITHOUT PROPER CONSENT 212
1217. EXCEPTION TO PERMIT PROVISIONS 213
1218. NON-CONFORMING SIGNS. 213
1219. INSPECTIONS. 214
1220. SIGNS REQUIRING REMOVAL. 214
1221. REMOVAL PROCEDURE. 215
1222. VARIANCES. 216
Article 13. THE SUBDIVISION AND SITE DEVELOPMENT PROCESS 217
1301. MANAGEMENT OF LAND DEVELOPMENT PROCESS: OVERVIEW 217
1302. GENERAL DEVELOPMENT REVIEW POLICY 217
1303. LOT STANDARDS AND RESTRICTIONS 217
1304. PROCESS DETAILS AND CHARACTERISTICS 218
1305. REGULATIONS AND PROCEDURES GOVERNING THE CONVEYANCE OF REAL PROPERTY AND EASEMENTS TO THE CITY OF GRIFFIN 227
1306. SUBDIVISION NAMES AND SITE PLAN NAMES 227
1307. VIOLATIONS AND STOP WORK NOTICES AND PROCEDURES 228
1308. SITE PROTECTION 228
1309. PERFORMANCE BONDING POLICY 228
1310. AS-BUILT PLANS 232
1311. CERTIFICATE OF USE AND OCCUPANCY 233
Article 14. ROADS, SITE AND DRAINAGE DESIGN SPECIFICATIONS 241
1401. SUBMITTAL REQUIREMENTS. 241
1402. ACCESS TO PROPERTY 242
1403. STREET DESIGN CRITERIA 243
1404. SIDEWALKS. 245
1405. TRAFFIC SIGNS 246
1406. UTILITY LOCATIONS 246

1407. BRIDGE PILING 246
1408. APARTMENTS AND CONDOMINIUMS 246
1409. MOBILE HOME PARKS 246
1410. SITE DESIGN FOR INDIVIDUAL COMMERCIAL/ INDUSTRIAL LOTS 246
1411. STORM DRAIN DESIGN CRITERIA 247
1412. MATERIALS 249
1413. CONSTRUCTION 250
1414 INSPECTION AND TESTS 252
Article 15. FIRE SAFETY SYSTEMS 281
1501. GENERAL POLICY AND REQUIREMENTS 281
1502. FIRE SAFETY SYSTEM - PLANNING AND DESIGN 281
1503. FIRE HYDRANTS 282
1504. FIRE FLOW REQUIREMENTS 284
1505. FIRE SAFETY SYSTEMS- PLAN SUBMISSION REQUIREMENTS 285
1506. FIRE LINE ORDINANCE 286
1507. FIRE SAFETY SYSTEMS - CONSTRUCTION STANDARDS 286
Article 16. WATER SUPPLY SYSTEMS 296
1601. PURPOSE 296
1602. GENERAL POLICY AND REQUIREMENTS 296
1603. FIRE SAFETY SYSTEMS 296
1604. PLANS AND SUBMITTALS 296
1605. AS-BUILT DRAWINGS 297
1607. WATER SYSTEM DESIGN CRITERIA 299
1608. MATERIAL SPECIFICATIONS 301
1609. WATER SYSTEM CONSTRUCTION 304
1610. INSPECTION AND TESTS 308
Article 17. SANITARY SEWER SYSTEMS 321
1701. PURPOSE 321
1702. GENERAL POLICY AND REQUIREMENTS 321
1703. PLANS AND SUBMITTALS 322
1704. EASEMENTS 324
1705. SEWERS IN RELATION TO STREAMS, LAKES AND OTHER WATER BODIES 325
1706. SEWER SYSTEMS IN RELATION TO WATERWORKS STRUCTURES 325
1707. DESIGN CALCULATIONS 325

1708. SANITARY SEWER DESIGN CRITERIA 326
1709. SANITARY SEWER PIPE DESIGN CRITERIA 333
1710. OTHER DESIGN REQUIREMENTS 336
1711. CONSTRUCTION METHODS 336
1712. INSPECTION OF SANITARY SEWERS 341
Article 18. SOLID WASTE REQUIREMENTS AND SPECIFICATIONS 368
1801. GENERAL POLICY AND REQUIREMENTS 368
1802. GENERAL REQUIREMENTS 368
1803. PLANNING AND DESIGN (GENERAL) 369
1804. SINGLE-UNIT DESIGN 369
1805. DOUBLE-UNIT DESIGN 370
1806. COMPACTOR DESIGN 370
1807. INFORMATION 371
Article 19. LEGAL STATUS PROVISIONS 372
1901. CONFLICTING ORDINANCES REPEALED 372
1902. IMPLEMENTATION OF THE LAND USE PLAN 372
1903. ZONING ORDINANCE SHALL CONTROL 372
1904. VALIDITY 372
1905. LIABILITY 372
1906. EFFECTIVE DATE 372
Appendix A Acknowledgment Form 373
Appendix B Conflict of Interest Disclosure Affidavits 374

LIST OF FIGURES

2. 1 BELTCOURSE 17
2. 2 BERM 17
2. 3 BUILDING SETBACK 18
2. 4 BUILDING HEIGHT 18
2. 5 CELLAR 18
2. 6 CORNICE 20
2. 7 JACK ARCH 26
2. 8 LINTEL 27
2. 9 CORNER LOT 28
2. 10 DOUBLE FRONTAGE 28
2. 11 FLAG LOT 28
2. 12 OPEN SPACE 30
2. 13 PEDIMENT 31
2. 14 RETURN CORNICE 33
2. 15 SEGMENTAL ARCH 33
2. 16 SIGHT TRIANGLES 34
2. 17 SOLDIER COURSE 34
2. 18 TRANSOM 36
7.1 OVERLAY DISTRICT MAP 124
14. 1 TYPICAL CONCRETE SIDEWALK 255
14. 2 CUL-DE-SAC MINIMUM LENGTHS 256
14. 3 "T" INTERSECTION- COLLECTOR/ ARTERIAL 257
14. 4 INTERSECTION - COLLECTOR/ ARTERIAL STREET 258
14. 5 STANDARD TYPICAL SECTION FOR RESIDENTIAL AND LOCAL STREETS WITH CURB AND GUTTER 259
14. 6 STANDARD TYPICAL SECTION FOR RESIDENTIAL MINOR COLLECTOR STREETS WITH CURB AND GUTTER 260
14. 7 STANDARD TYPICAL SECTION FOR MAJOR COLLECTOR STREETS (4-LANE DIVIDED WITH CURB AND GUTTER) 261
14. 8 STANDARD TYPICAL SECTION FOR MINOR ARTERIAL STREETS (6-LANE DIVIDED WITH CURB AND GUTTER) 262
14. 9 STANDARD RESIDENTIAL CUL-DE-SACS 263
14. 6 STANDARD RESIDENTIAL CUL-DE-SACS 264
14. 7 LANDING REQUIREMENTS FOR RESIDENTIAL STREET INTERSECTIONS 265
14. 8 STANDARD TYPICAL SECTION FOR TOWNHOUSE, CONDOMINIUM, MOBILE HOME AND APARTMENT STREETS WITH NO RESIDENTIAL FRONTAGE 266
14. 9 RESIDENTIAL PRIVATE STREET STANDARDS 267
14. 10 STANDARD TYPICAL STREET SECTION WITH CURB AND GUTTER IN COMMERCIAL AND INDUSTRIAL DEVELOPMENTS 268
14. 15 CUL-DE-SAC (INDUSTRIAL/ COMMERCIAL) 269
14. 16 CURB AND GUTTER 270
14. 17 COMMERCIAL DRIVEWAY ON EXISTING STREET 271
14. 18 INTERSECTION SIGHT DISTANCE REQUIREMENTS 272
14. 19 SUBDIVISION ENTRANCE SIGHT DISTANCE 273

14. 20 RESIDENTIAL STREET UTILITY LOCATION 274
14. 21 TYPICAL STREET CUT REPAIR 275
14. 12 HANDICAPPED PARKING SPACE STANDARD 276
14. 13 HANDICAPPED PARKING STANDARD FOR TWO ADJACENT PARKING SPACES 277
14. 144 PUBLIC STREET NAME SIGN STANDARD 278
14. 25 PRIVATE STREET SIGN STANDARD 279
14. 26 WHEELCHAIR RAMP 280
15. 1 FIRE LINE DETAIL 289
15. 2 TYPICAL FIRE HYDRANT INSTALLATION 290
15. 3 TYPICAL FIRE HYDRANT LOCATION 291
15. 4 TYPICAL FIRE HYDRANT ISLAND- PARKING AREA 292
15. 5 TYPICAL FIRE HYDRANT POST PROTECTION 293
15. 6 EMERGENCY ACCESS SPACE CONSOLIDATED WITH 2 ADJACENT PARKING SPACES RESERVED FOR THE HANDICAPPED 294
15. 7 TYPICAL EMERGENCY ACCESS SPACE 295
16. 1 TYPICAL WATERMAIN AT CUL-DE-SAC 312
16. 2 3/4" WATER METER LOCATION FOR SUBDIVISIONS 313
16. 3 RESIDENTIAL WATER METER INSTALLATION 314
16. 4 HOUSE SERVICE INSTALLATION 315
16. 5 COMPOUND METERS AND VAULT 316
16. 6 DETECTOR/ WATER METERS AND VAULT 317
16. 7 TYPICAL ROAD CROSSING 318
16. 8 AIR AND VACUUM RELEASE VALVE ASSEMBLY 319
16. 9 CONCRETE BLOCKING DETAIL 320
17. 1 PEAK FLOW FACTORS 346
17. 2 PRECAST CONCRETE MANHOLE 347
17. 3 STANDARD VENTED MANHOLE (FOR PIPE LARGER THAN 18") 348
17. 4 STANDARD MANHOLE PLANS 349
17. 5 MANHOLE STEP 350
17. 6 STANDARD MANHOLE FRAME AND COVER 351
17. 7 MANHOLE FRAME GRADE ADJUSTMENT 352
17. 8 SEWER SERVICE LATERAL 353
17. 9 SEWER SERVICE LOCATION DETAIL 354
17. 7 CLEANOUT DETAIL 355
17. 8 CONCRETE ENCASEMENT 356
17. 12 TYPICAL PIPE ADAPTER 357
17. 9 SEWER PIPE ANCHOR 358
17. 14 PIPE CLASS "A" BEDDING 359
17. 15 PIPE CLASS "B" BEDDING 360
17. 16 PIPE CLASS "C" BEDDING 361
17. 17 MINIMUM PVC PIPE BEDDING DETAIL 362
17. 18 SEWER AIR AND VACUUM VALVE ASSEMBLY 363
17. 19 SEWER CASING SPACER DETAIL 364
17. 10 FENCE AND GATE DETAIL 365
17. 11 RESIDENTIAL STREET UTILITY LOCATION 366
17. 12 PLAN AND PROFILE- SUBMITTAL EXAMPLE 367

LIST OF TABLES

Table 7. 1 Zoning Districts to Comprehensive Plan Categories 66
Table 7. 2 Zoning Districts and Abbreviations 66
Table 7. 3 Permitted Use Table by Zoning Category and Development 68
Table 7. 4 MU/TOD: Neighborhood Tier Building Height 130
Table 7. 5 MU/TOD: Village Tier Building Height....130
Table 7. 6 MU/TOD: Corridor Tier Building Height 131
Table 7. 7 MU/TOD: Open Space....131
Table 7. 8 MU/TOD: Permitted Colors 139
Table 7. 9 MU/TOD: Streets and Sidewalks 142
Table 8. 1 Accessible Parking....186
Table 8. 2 Number of Parking Spaces 187
Table 8. 3 Loading Spaces 191
Table 8. 4 Recommended Trees 194
Table 14. 1 Minimum design speed and maximum grade 243
Table 14. 2 Widening for development entrances....244
Table 14. 3 Residential street section....245
Table 14. 4 Industrial/ commercial streets 245
Table 14. 5 Grading....250
Table 15. 1 Building height distance from the curb or Emergency Access point 282
Table 15. 2 Use group and Fire Hydrant remote distance 284
Table 15. 3 Fire flow requirements for single-family detached and two-family dwellings 285
Table 15. 4 Fire lane sign lettering 287
Table 16. 1 Instantaneous water demands for residential areas....299
Table 16. 2 Rock Excavation Depths 307
Table 16. 3 Allowable leakage table (gph/1,000 ft. of pipeline*) 309
Table 16. 4 Water Neutralizing Chemicals....309
Table 17. 1 Average daily wastewater flows by future land use category 325
Table 17. 2 Minimum required sewer pipe slopes 327
Table 17. 3 Trench excavation depths....341
Table 17. 4 Air pressure test maximum acceptable limits 343
Table 17. 5 Maximum test times for various manhole diameters (inches) 344
Table 17. 6 Maximum acceptable water leakage 344

Preface

The Unified Development Ordinance is a compilation of the former Zoning, Development, and Sign regulations of the City of Griffin, formerly codified in the City of Griffin, Georgia, at Chapter 70, Signs; Appendix "A", Zoning; and Appendix "C", Development. The intent was to separate these regulations from the remainder of the Code of Griffin in order to streamline and publish our zoning/development/sign standards in a separate publication, available for reproduction and sale to the public.

No parcels were "rezoned" by changing or reassigning to a different zoning classification. Although most of the text of these ordinances was carried forward unchanged in the process of combining the ordinances, some changes in the text, including the text of district and overlay classifications, occurred; this may affect the ability to engage in land uses heretofore allowed. Any application for a zoning decision, a development approval, or a sign permit pending on the effective date of Ord. No. 12 - ____, will continue to be governed by the respective ordinance in force on the date such application was filed.

In addition, Chapter 70, Signs, of the Code of Griffin, Georgia, was restated in its entirety into this Unified Development Ordinance and regulations on signage, together with permitting procedures, may now be found in Article 12 of this Ordinance.

This Unified Development Ordinance may be viewed and printed from www.municode.com or by following the link to the Code of Griffin, Georgia, on the City of Griffin's website, www.cityofgriffin.com. Individual printed copies are available for sale in the Development Services Division of the City of Griffin, One Griffin Center, 100 S. Hill Street, 3rd Floor, Griffin, GA, or by contacting (770) 233-4130.

Article 1. INTRODUCTION AND AUTHORITY

101. TITLE

101 A. Title.

This ordinance shall be known and cited as "The City of Griffin Unified Development Code."

101 B. Purpose and scope.

These regulations seek to encourage development of land within the City of Griffin in accordance with the policies and goals of the City of Griffin Comprehensive Plan. Providing reasonable land uses and development controls helps reduce or eliminate the occurrence of conditions that may threaten the general health, safety and welfare of the residents of the City of Griffin. This ordinance shall serve the following purposes:

1. Promote proper use and location, height, bulk, number of stories and size of buildings and other structures; sizes of yards and other open spaces; density and distribution of population; use of buildings, structures and land for commercial trade, professional offices, industry, residential, recreational, sanitation, conservation, transportation and public activities and the percentage of land which may be occupied by structures;
2. Mitigate congestion, prevent overcrowding of land; to avoid undue concentration of population; to prevent urban sprawl; to facilitate the adequate provision of transportation, water, drainage, sanitary sewer, parks and other public infrastructure; To assure the provision of required streets, utilities, and other facilities and services to new land developments;
3. To promote desirable living conditions and the sustained stability and integrity of existing neighborhoods;
4. To foster city economic development; protect property against blight and depreciation; to conserve the value of existing buildings; to encourage the most appropriate use of land, buildings and structures throughout the City of Griffin.
5. To adequately provide for designs that protect the natural environment and retain the character of the City of Griffin by supporting a landscape and tree protection plan, recreation plan, green space and a higher level of order, prosperity and aesthetics;
6. To assure the provision of needed public open spaces and building sites in new land developments through the dedication or reservation of land for environmental, recreational, and other public purposes;
7. To secure economy in governmental expenditures.
8. To encourage the orderly subdivision of land and maintain clear city land records, and that certain basic requirements are met for development of building lots, and to provide for the construction of required public improvements. The recordation of an approved subdivision plan permits the landowner to affect a simple transfer of land created by the subdivision by reference to the recorded plan.
9. The purpose for the review and approval of site development plans is to provide enforcement of the requirements of the zoning ordinance, state laws, and other regulations are met, and that public improvements, lawfully required by these laws and ordinances or proposed by the applicant, are constructed to appropriate standards. The city may prescribe appropriate conditions and safeguards to further express the intent of this ordinance.
10. The city shall consider the expeditious, fair and quality review and approval of site plans and subdivision plans and plans as part of the plan for the orderly, efficient, and economical growth and development of the city.
11. Land to be developed shall be of such a character that it can be used for building purposes without danger to health, peril from fire or flood, and to improve the health, safety, convenience, and general welfare.
12. The proposed streets and overall traffic pattern shall provide a convenient and safe system conforming to the comprehensive plan and shall be of such width, grade, and location so they accommodate the prospective vehicular, non-vehicular and pedestrian traffic and to facilitate fire protection and emergency services.

101 C. Additional purposes.

The City of Griffin Unified Development Code further provides for the following:

1. Defines certain terms used in this ordinance;
2. Establishes certain land use zoning districts, the intent of each zoning district, and specifies the boundaries of those districts on the official zoning map;
3. Establishes procedures for administering, enforcing, appealing and amending the ordinance;
4. Regulates site design and use of buildings and structures located within the corporate limits of the City of Griffin;
5. Provides penalties for violation of this ordinance;
6. Defines the power and duties, as they relate to this ordinance, of the board of commissioners, as well as such administrative officers, bodies and agencies that the board of commissioners may establish for the efficient exercise of the zoning powers of the City of Griffin including but not limited to the zoning administrator and the planning and zoning board.
7. Repeals all conflicting ordinances, rules and regulations enacted by the City of Griffin, Georgia.

101 D. Authority.

Authority for establishment of development regulations in the City of Griffin is contained in Article IX, Section II, Paragraph IV of the 1983 Constitution of the State of Georgia; the Georgia Planning Act, as amended; and in the Zoning Procedures Law, as amended, which includes within its definition of "zoning ordinance" any ordinance which establishes the uses and development standards of property. The public health, safety, morals and general welfare require the harmonious, orderly, and progressive development of land within the cities and counties of the state. In furtherance of this purpose, the Unified Development Code is authorized to carry out the orderly development of communities.

This Unified Development Code is the instrument through which the board of commissioners, planning and zoning board, and staff is empowered to carry out future development in the City of Griffin.

101 E. Interpretation and application.

In interpreting and applying these regulations, the requirements contained herein are declared to be the minimum requirements necessary to carry out the purpose of these regulations. These regulations shall not be deemed to interfere with, abolish, override or affect in any manner whatsoever any deeds, easements, covenants or other agreements between parties respecting interest in real property, entered prior to the effective date of this ordinance. Whenever the provisions of these regulations impose greater restrictions upon the use of land, buildings or structures or upon the height of buildings, structures or require a larger percentage of lot to be left unoccupied than the provisions of any deeds, easements, covenants or other agreements between parties respecting interest in real property, entered on or after the effective date of this ordinance, the provisions of this ordinance shall govern.

101 F. Zoning affects all land and buildings.

No building, structure or land shall be used or occupied; and no building, structure or part thereof shall be erected, constructed, reconstructed, moved, enlarged or structurally altered unless in conformity with the regulations of this ordinance.

101 G. Severability and conflicts.

1. These regulations shall have the force and effect of law. In the event any part or provision of this ordinance is held to be illegal or void, this shall not have the effect of making void or illegal any of the other parts or provisions of this ordinance, which shall remain effective.
2. Any previously adopted rules and regulations pertaining to developments that are in conflict with these regulations are hereby made null and void.
3. Whenever the provisions of this ordinance and those of some other ordinance apply to the same subject matter, the ordinance last enacted in time shall govern, and the earlier ordinance shall be deemed repealed by preemption; provided, however, the City of Griffin

Soil Erosion and Sedimentation Control Ordinance is hereby expressly saved from repeal and any conflict between that ordinance and this ordinance shall be resolved based upon the general law found in O.C.G.A. title 12, chapter 7, governing local erosion and sedimentation control ordinances.

101 H. Effective date.

This ordinance shall become effective upon its adoption on second and final reading; provided, however, this ordinance shall apply only to development and zoning applications filed after its effective date. All pending applications shall continue to be processed under the regulations in effect on the date such application, in complete form and with all requisite fees paid, was accepted.

101 I. Amendments.

Whenever the board of commissioners amends this ordinance, such amendments shall have no effect on previously accepted applications in the development process; provided, however, an applicant may elect to have an on-going development project comply with the newly amended standards.

101 J. Jurisdiction.

These regulations shall govern all developments of land within the incorporated areas of the City of Griffin, Georgia as now or hereafter established, and shall govern all undeveloped properties and projects.

101 K. Violations and Penalties.

Any person, firm, corporation or any agent, servant, employee, officer or contractor for any person, firm or corporation who shall violate any provision, requirement, term or condition of this ordinance shall be cited for trial before the municipal court, and if found guilty, may be punished by a fine not to exceed $1,000.00 per day or $2,500.00 for erosion and sedimentation control, and each day of such violation shall constitute a separate offense.

1. The director of development services, director of public works, director of stormwater, or director of water/wastewater or their designated representative are hereby authorized and directed to issue "stop work" orders in writing on any project when the person or persons responsible therefore shall fail or refuse to comply with any ordinance or regulation, including these standards, pertaining to any matter contained herein or in any ordinance or resolution relating to zoning or land development. Such "stop work" orders may be lifted at such time as the city is satisfied that a good faith effort to comply is being made. A written order is not required from the responsible department director where an emergency exists.
2. Whenever the either the director of development services, director of public works, director of stormwater, or director of water/wastewater finds that any existing grading, drainage or other condition involving the application of these regulations constitutes or creates a public hazard and/or emergency condition, the owner of the property on which such condition is identified shall, upon receipt of notice in writing from the appropriate director, perform or cause to be performed such remedial work, repairs, or maintenance, as the director deems necessary to abate the hazard. Any such work shall be done in conformance with the requirements of this ordinance, and any orders issued by the director in question. Failure to comply with an emergency order hereunder shall constitute a violation of this ordinance.
3. Any person who violates any provision of this ordinance and any rules and regulations adopted pursuant thereto, or any permit, condition or limitation established pursuant to these regulations, or who negligently or intentionally fails or refuses to comply with any order of the city issued under authority hereof shall be liable for a civil penalty not to exceed $1,000.00 per day or $2,500.00 for erosion and sedimentation control. Each day during which the violation or failure or refusal to comply continues shall be a separate violation.

101 L. Limits to Director's Authority: Variances.

The minimum development standards set forth in this ordinance are intended to control all development within the city and be strictly adhered to. City staff has no authority to waive any requirement or to grant variances, except under special circumstances for

zoning criteria related to infill development, as provided by Article 6. When compliance with a particular requirement contained in this ordinance unduly burdens the applicant, or is reasonably likely to create harm to an adjacent property, applicant may seek a variance, as provided by Article 4 Procedures.

101 M. Platting authority.

From and after the effective date of this ordinance, the director of development services shall be the official subdivision platting authority, and no plan of a land subdivision as defined in these regulations shall be entitled to be recorded in the office of the clerk of the superior court of Spalding County unless it shall have the approval of the director of development services inscribed thereon. The transfer, sale, agreement to sell, or negotiation to sell land by reference to, exhibition of, or other use of a plan of subdivision not bearing the approval of the City of Griffin as provided by this ordinance, or based on a legal description by metes, bounds, courses and distances in an instrument of title, shall not bind the city to recognize the real property so transferred or conveyed as a lot of record for purposes of future development.

101 N. Erection of buildings.

No building permit shall issue and no building or structure shall be erected on any lot in the city unless the street giving access thereto has been approved and accepted for dedication in accordance with this ordinance.

Article 2. INTERPRETATIONS AND DEFINITIONS

201. INTERPRETATION OF CERTAIN TERMS AND WORDS

When used in this ordinance, the following words and phrases have the meaning as defined in this article. Words not defined here have the same meaning as found in most dictionaries, where consistent with the context.

The words "must" "will" and "shall" are mandatory in nature, indicating that an action has to be done.

The word "may" is permissive and allows discretion regarding an action.

When consistent with the context, words used in the singular number include the plural and those used in the plural number include the singular. Words used in the present tense include the future.

The word "district" shall mean "Zoning District" for the purposes of this ordinance.

The word "map" or "zoning map" shall mean "Official Zoning Map of the City of Griffin" for the purposes of this ordinance.

The word "person" includes a firm, company, partnership, association, public or private authority or corporation.

The word "building" includes the term "structure" (all buildings are structures, but not all structures are buildings).

The word "lot" includes the words "lot", "plot" or "parcel".

The word "used" or "occupied" as applied to any land or building shall be considered to also include "designated, arranged, occupied, intended or designed to be used or occupied."

202. DEFINITIONS

For the purposes of this chapter, certain terms or words used herein shall be defined as follows:

A

AASHTO: The American Association of State Highway and Transportation Officials.

Abutting: Having property boundaries or lot lines in common with no separating by a street, alley or other right-of-way.

Accessory dwelling unit: A dwelling unit, but not a mobile home, located on the same lot as a one-family detached dwelling unit, usually in the form of a garage apartment or basement apartment. Each unit has a separate, complete housekeeping unit with a separate entrance, and full bathroom facilities.

Accessory: A structure customarily incidental and subordinate to the principal use or structure and located on the same zoning lot as such a principal use or structure. The combined square footage of all accessory structures shall not exceed 50 percent of the square footage of a residential dwelling or 25 percent square footage of a commercial structure nor shall an accessory structure exceed the height of the principal dwelling or structure.

Acre: For the purpose of this ordinance, a measure of land consisting of 43,560 square feet.

Acre-foot: Quantity of water that would cover one acre, one foot deep. An acre-foot contains 43,560 cubic feet.

Acreage: Acres collectively in a tract of land.

Acreage, gross: The collective number of acres in an undeveloped, unimproved tract of land.

***Acreage, net**:* The collective number of acres in a tract of land less the amount of area improved by streets, sidewalks, Stormwater management areas, floodplain, wetlands, required open or common space, greenspace and other public lands.

Adequate channel: A natural or man-made channel or pipe that is capable of conveying the runoff from the applicable storm design without overtopping its banks or eroding, after development of the site in question.

Adjacent/adjoining: Abutting or being directly across a street, alley, other rights-of-way or waterways.

***Administrator, zoning**:* The person designated by the city manager of the City of Griffin to administer the enforcement of this ordinance.

Adult daycare: A facility that provides support for elderly individuals (and their families, if present), who do not function fully independently, but who do not need 24-hour nursing care.

Adult entertainment establishments: Any commercial establishment which has as its primary purpose or business the offer for sale of any book, publication or film-video which depicts nudity or sexual conduct or engages in services such as bath houses, massage parlors, wrestling parlors or like activity including a nightclub, cabaret, lounge or other establishment which features adult entertainment.

***Aeronautical related use**:* A use that involves the operation, storage and/or repair of aviation related parts, products or services; such as, but not limited to, sale of fuel and oil, tie downs, hangars, ramp services, aircraft and avionics repair, aircraft sales, etc.

Agriculture: The raising of soil crops and livestock in a customary manner on tracts of land at least three acres in size and shall include all associated activities. Retail sale of products raised on the premises shall be considered a permissible activity provided that space necessary for the parking of customer's vehicles shall be provided off public right of way.

***Airport related accessory uses**:* A use that is clearly incidental to the operation of the facility as an airport, is normally conducted in an airport terminal building, is designed to provide airplane passengers and crews with products and services and is directly related to the ability of the facility to operate as an airport; such as, but not limited to, snack bar, delicatessen, automobile rental agency, newsstand, sundry sales, etc.

***Alley**:* A minor street which is used primarily as a service way providing a secondary means of public access to abutting property and not intended for general traffic circulation. A public or private way within a block, generally giving access to the rear of lots or buildings and not used for general traffic circulation.

***Alteration**:* Any change in the supporting members of a building; any addition to or reduction of a building; any change in use; or any relocation of a building.

Ambulance service or rescue squad: A privately owned facility for the dispatch, storage, and maintenance of emergency medical care vehicles.

Amenity: Aesthetic or other characteristics of a development that increase the desirability to a community or its marketability to the public. Amenities may differ from development to development but may include such things as a unified building design, recreational facilities, site design, neighborhood clubhouse, pool, or tennis courts.

ANSI: The American National Standards Institute, Inc.

Applicant: A person seeking any determination or approval under, or permits required by these regulations.

Application: An application for development approval that contains the supporting documentation required by these regulations.

Architect: A person who, by reason of his knowledge of the mathematical and physical sciences and the principles of architecture and architectural design, acquired by professional education, practical experience or both, is qualified to engage in the practice of architecture as attested by the issuance to said person of a license as an architect by the State of Georgia.

Area: The area of a property shown to the nearest whole square foot or to the nearest one hundred thousandth of an acre.

Art, music or other studio: A space which can be used as an artist's workroom, a photographer's establishment, an establishment where an art is taught or studied including but not limited to dance, music, painting, drawing, TV, film, or other art endeavors.

Arterial street: A major highway with full or partial control of access.

ASCE: The American Society of Civil Engineers.

Assisted Living: A residential complex which may be in any form including detached and attached dwelling units and residences offering private and semi-private settings designed for and principally occupied by senior citizens. Such facilities may include a congregate meals program in common dining areas, but exclude institutional care such as medical or nursing care.

ASTM: The American Society of Testing and Materials.

Automotive repair: Automotive maintenance functions including, but not limited to, the replacement, installation or repair of tires, mufflers, batteries, brakes and master cylinders, shock absorbers, electrical instruments and minor tune-ups involving the changing of spark plugs, points or condenser and engine block oil changes for passenger cars, vans and light trucks only.

Awning: A rooflike cover extending over or before a place as a shelter and which may be used in lieu of a sign. Such signs must be entirely supported from the building and must not exceed four feet in height.

AWWA: The American Water Works Association.

B

Base flow: The portion of stream flow originating from ground water.

Basement: An area below the first floor having not more than one-half of its height above the grade used for storage, garages for use of occupants of the principal dwelling or other utilities common to the rest of the building. A basement used for the above purposes shall not be counted as a story.

Bed and breakfast inn: A residence in which the owner may reside as a private residence and where guest rooms are made available for visitors. Breakfast is the only real meal served and is included in the charge for the room.

Belt course: Also called stringcourse or band course. A molding or projecting course running horizontally along the face of a building

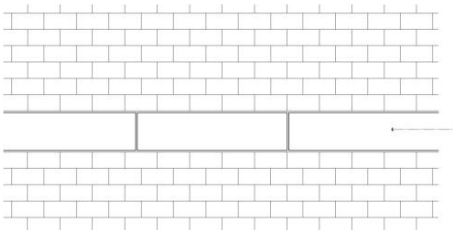

2. 1 BELTCOURSE

Berm: The space left between the upper edge of a cut and toe of an embankment to break the continuity of an otherwise long slope.

Block: A piece or parcel of land entirely surrounded by public highways or streets other than alleys. In cases where the plotting is incomplete or disconnected, the subdivider may determine the outline of the block.

BMP or Best Management Practice: An effective practicable means of reducing the amount of pollution generated by nonpoint sources, which may be structural or nonstructural practices or a combination of practices.

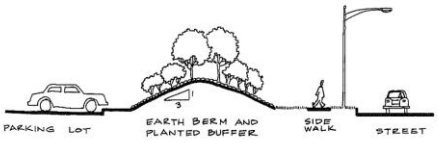

2. 2 BERM

Board of commissioners or board of commissioners: The governing body of the City of Griffin, Georgia.

Board of commissioners: The term "board of commissioners" means the board of commissioners of the City of Griffin, Georgia. The board of commissioner is also known as the city commission.

Boarding home: A dwelling other than a hotel where, for compensation and by prearrangement for a definite period, where meals and/or lodging are provided for four (4) or more persons.

Bond: When a bond is required by law, an undertaking in writing, without seal, is sufficient; and in all bonds where the names of the obligors do not appear in the bond, but are subscribed thereto, they shall be bound thereby.

Breezeway: A covered passage one story in height connecting a main structure and an accessory structure.

Buffer: A natural or landscaped area along the property line between different and possibly incompatible types of zoning districts or land uses. Fencing may be erected in buffers but shall not substitute plant materials. Unless otherwise indicated, buffers may be established within the building setback and shall not be enforced in addition to such setback. A buffer shall not be occupied with structures and facilities except as permitted by this ordinance.

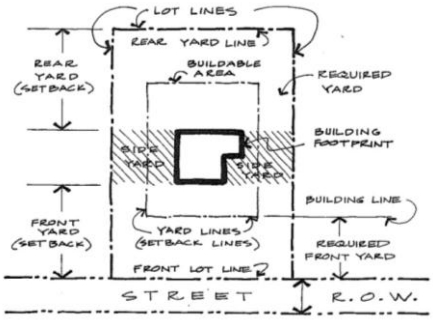

2. 3 BUILDING SETBACK

Building: Any structure having a roof and intended for shelter, housing or enclosure of persons, animals or property of any kind.

Building height: The vertical distance of a building measured from the average elevation of the finished grade at the front of the building to the highest point of the building.

Building setback line: The minimum horizontal distance between the property line or the street right-of-way where appropriate and the building or any projection thereof, except as noted in the zoning regulations.

Building, accessory: A detached structure, the use of which is clearly incidental to, customarily associated with and related to the principal structure or use of the land and which is located on the same lot as the principal structure or use.

Building, principal: The building in which is considered the principal use of the zoning lot on which said building is situated.

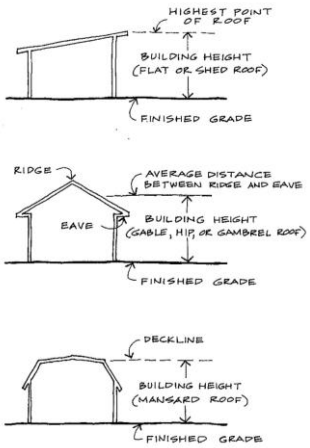

2. 4 BUILDING HEIGHT

C

Car wash: A primary, main or accessory use, which provides space or bays for cleaning vehicles.

Care home: A rest home, nursing home, convalescent home, home for the aged, or similar use established and operated on a profit or non-profit basis to provide lodging and/or meals and/or domiciliary care for aged, informed, chronically ill or convalescent persons.

Catchment area or basin: See Watershed.

Cellar: A space with less than one-half of its floor-to-ceiling height above the average finished grade of the adjoining ground or with a floor-to-ceiling height of less than 6.5 feet.

Cemetery: The use of property as a burial place for human remains. Such a property may contain a mausoleum.

Center line: The line surveyed and monumented by the governing authority as the center line of the street or highway. If such center line has not been surveyed, it shall be that the (sic) line running midway between the outside curb and ditches of the street or highway or the middle of the traveled roadway or the street.

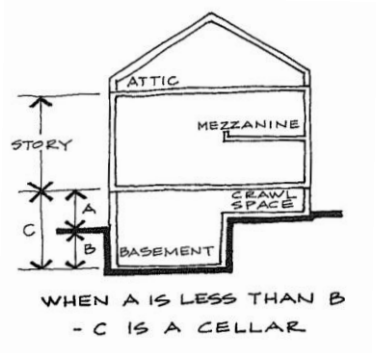

2. 5 CELLAR

Channel: An elongated depression, either naturally or artificially created and of appreciable size, which periodically or continuously contains moving water, or which forms a connecting link between two bodies of water. It must have a definite bed and bank that serve to confine the water.

***Charter**:* The term "Charter" means the Charter of Griffin, Georgia.

Check Cashing Facility: A person or business that for compensation engages in whole or part in the business of cashing checks, money orders or other commercial paper services the same purpose as check cashing. This does not include a state or federally chartered bank, saving and loan or credit union.

City engineer: The city engineer of the City of Griffin, Georgia.

City manager: The city manager of the City of Griffin, Georgia.

***City**:* The term "city" means the City of Griffin, Georgia.

Civic Building, Facility, Land: A building or site for functions accessed by the general public.

Clearing: The removal of trees or other vegetation, but not including grubbing activities.

***Clinic**:* An establishment where medical or dental patients are admitted for examination and treatment, but overnight stay is prohibited.

***Club or lodge, non-commercial**:* An incorporated or unincorporated association for civic, social, cultural, religious, fraternal, literary, political, recreational or like activities operated for the benefit of its members and not open to the general public.

***Cluster development**:* A development, under a single ownership, consisting of a design technique that concentrates a series of attached and/or detached dwelling units on a part of the site to allow the remaining land to be used for recreation, common open space and preservation of environmentally sensitive features.

***Code**:* The terms "Code" and "this Code" mean the Unified Development Code of Griffin, Georgia, as designated in section 101.

Colleges/Universities: An institution other than a trade school that provides full-time or part-time education beyond high-school.

Commercial recreation, indoor: An establishment providing completely enclosed recreation activities. Accessory uses may include the preparation and serving of food or sale of equipment related to the enclosed uses. Commercial recreation, indoor includes but is not limited to bowling, roller skating, ice-skating, billiards, motion picture theatre, pool, rock climbing wall.

Commercial trade or vocational school: A secondary or higher education facility primarily teaching usable skills that prepare students for jobs in a trade and meeting the state requirements as a vocational facility.

Commercial recreation, outdoor: Land or premises designed to be used by members of the public, for a fee, that contain outdoor amusement facilities such as miniature golf course, merry go round, car race tracks, and outdoor motion picture theatres, golf course.

***Communication tower**:* A structure that is intended to send and/or receive radio, television or cellular communications.

***Community garden**:* a single piece of land gardened collectively by a group of people.

Comprehensive plan: The comprehensive plan adopted by the board of commissioners pursuant to O.C.G.A. § 36-70-3, as said plan may be amended from time to time.

***Computation of time**:* Except as otherwise provided by time period computations specifically applying to other laws, when a period of time measured in days, weeks, months, years or other measurements of time except hours is prescribed for the exercise of any privilege or the discharge of any duty, the first day shall not be counted, but the last day shall be counted; and, if the last day falls on Saturday or Sunday, the party having such privilege or duty shall have through the following Monday to exercise the privilege or to discharge the duty. When the last day prescribed for such action falls on a public and legal holiday as set forth in O.C.G.A. § 1-4-1, the party having the privilege or duty shall have through the next business day to exercise the privilege or to discharge the duty. When the period of time prescribed is less than seven days, intermediate Saturdays, Sundays and legal holidays shall be excluded in the computation.

***Condominium**:* An individually owned dwelling unit in an attached, detached or multi-family structure, combined, with joint ownership of common areas of the buildings and grounds as defined by the laws of the State of Georgia.

Conduit: A general term for any channel intended for the conveyance of water, whether open or closed; any container for flowing water.

Construction costs: The total value of the construction of, or reconstruction work on structures, as determined by the director of development services, or their designee, in issuing a building, or other type, permit for construction or reconstruction.

Construction plans: A set of engineering drawings of the proposed streets, drainage and utilities, which meets the minimum standards of these regulations.

Construction vehicle: Any vehicle (other than passenger vehicle, pick-up or panel truck) having a primary purpose of land clearing or grading, hauling and use in building construction, including but not limited to earth moving equipment such as bulldozers, loaders, backhoes, bobcats, trenching machines and dump trucks.

Construction, continual: Construction performed by a full complement of workers and equipment mobilized at the project site, actively engaged in incorporating materials and equipment into the building or structure each normal working day.

Contractor: A person, firm or corporation who the owner of a property has employed, or contracted to perform, construction activity associated with a development. For purpose of this regulation the term contractor shall include all subcontractors who are under separate contract or agreement with the contractor for performance of a part of the work at the site.

Convenience store with gas: A use offering a limited variety of groceries, household goods, freshly prepared food, beer, wine and personal care items, in association with the dispensing of motor fuels as an accessory use, but in all cases excluding vehicle service, maintenance and repair.

Convenience store without gas: A use offering limited variety of groceries, household goods, freshly prepared food, beer, wine and personal care items.

Cornice: Any horizontal member, structural or nonstructural, projecting outward from the exterior walls at the roofline, including eaves and other roof overhang.

Corporate limits: The term "corporate limits" means the corporate limits of the City of Griffin.

County: The terms "county," "the county" and "this county" mean the County of Spalding, Georgia.

Court: The term "court" means the municipal court provided by law for the punishment of offenders against the laws or ordinances of the city, whether it shall be the court now constituted or a court hereafter established pursuant to law.

Crematorium: A location containing properly installed, certified apparatus intended for the use in the act of cremation.

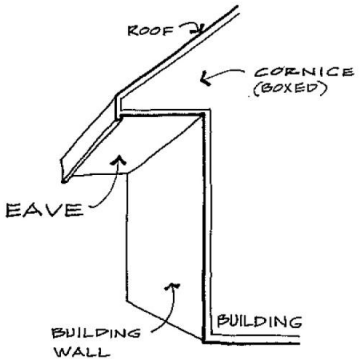

2. 6 CORNICE

Cul-de-sac: A street having one end open to traffic and being permanently terminated within the development by a vehicular turnaround. For the purpose of designation, a cul-de-sac street shall be interpreted to begin at the intersection of two or more streets nearest to the vehicular turnaround.

Cultural facility: A library, museum, or similar public or quasi public use displaying, preserving and exhibiting objects of community and cultural interest in one or more of the arts or sciences.

Culvert: A closed conduit of waterway carrying water through a highway or railroad embankment. Although there are borderline cases a culvert is distinguished from a bridge by certain characteristics, such as (a) a culvert generally has the same material all around its perimeter, and has a regular, symmetrical shape, where a bridge opening has not — in other words, a culvert is a large pipe; (b) a culvert usually has a large ratio of length to width.

Curb cut: The point at which vehicular access is provided to a lot from an adjoining street.

D

Day care facility: A use in which shelter, care and supervision for seven or more persons on a regular basis away from their primary residence for less than 24 hours per day. A day care facility may provide basic educational instruction. The term includes, but is not limited to, nursery school, kindergarten, early learning center, playschool, pre-school, adult day care and group day care home. A day care facility must meet State of Georgia regulations.

DCA: The Georgia Department of Community Affairs.

Dead-end street: Streets that do not have permanent vehicular turnarounds at its termini.

Debris: Any material, including wood, floating trash, suspended sediment or bed load moved by a flowing stream; detritus. This term also includes those materials that may be disposed of in a debris landfill.

Decorative Pole: GranVille prismatic glass acorn luminaire, north Yorkshire cast aluminum fluted pole, cast iron base with steel shaft.

Delegation of authority: Whenever a provision requires the head of a department or an official of the city to do some act or perform some function, it shall be construed to authorize the head of such department or the official to designate, delegate and authorize subordinates to do the required act or perform the required function, unless the terms of the provisions designate otherwise.

Demolition: The razing of any structure above the existing grade or demolition of any structure below the existing grade.

Density: The number of dwelling units per acre of land used for residential purposes. Density figures are to be in terms of net acres, total developable acres or the land devoted to residential use exclusive of streets, sidewalks, stormwater management areas, floodplain, wetlands, required open or common space, greenspace and other public lands.

Design professional: An individual who meets state licensure requirements applicable to the profession or practice he is engaged in.

Developer: Any person, individual, firm, partnership, association, corporation, estate, trust or any other group or combination acting as a unit who directs the undertaking or proposes to undertake development as herein defined, whether the development involves the subdivision of the land for sale to individual users, the construction of buildings or other improvements on a single land ownership, or both.

Development: The construction, reconstruction, conversion, structural alteration, relocation or land disturbance of a commercial use or residential subdivision which may involve the following activities:

- **a.** The subdivision, consolidation or boundary adjustment of a lot or lots;
- **b.** The construction, reconstruction, conversion, structural alteration, relocation, enlargement or demolition of a structure;
- **c.** The mining, excavation, landfill, drilling, grading, deposition of refuse, solid or liquid waste, or fill on a zoning lot;
- **d.** The alteration of the shore or bank of a pond, lake, river or other waterway; or
- **e.** Any use or change in the use or intensity of use of any structure or any change in the intensity of use of land.

Dike: An embankment to confine or control water, especially one built along the banks of a river to prevent overflow of lowlands; a levee.

Director of development services: The director of the development services department of the City of Griffin or their designee.

Director of public works: The director of the public works department and division of the City of Griffin or their designee.

Director of solid waste: The director of the solid waste division of the City of Griffin or their designee.

Director of stormwater: The director of the stormwater department of the City of Griffin or their designee.

Discharge: (a) The quantity of water, silt, or other mobile substances passing along a conduit per unit of time; rate of flow; cubic feet per second; liters per second, millions of gallons per date, etc.; (b) The act involved in water or other liquid passing through an opening or along a conduit or channel; (c) The water or other liquid which emerges from an opening or passes along a conduit of channel.

Ditch: An artificial channel, usually distinguished from a canal by its smaller size.

Dog day care: Any premises containing four or more dogs which are five months old or older which provide such services as canine day care for all or part of the day, training, grooming, behavioral counseling and accessory retail sales.

Dog grooming: Any place or establishment, public or private, where animals are bathed, clipped or combed for the purpose of enhancing aesthetic value or health for a fee.

Drainage area: The area of a stream at a specified location, measured in a horizontal plane, which is enclosed by a topographic divide such that direct surface runoff from precipitation normally would drain by gravity into the river basin above the specified point.

Dwelling: A building used for residential occupancy.

Dwelling, duplex (two family): A building containing two single-family dwelling units totally separated from each other by a common wall extending from ground to roof.

Dwelling, multi-family: A building containing three or more dwelling units, with each dwelling unit having a common wall or common floor connecting it to at least one other dwelling unit in the building or a single family type building not connected to any other unit which is not located on a single zoning lot surrounded by open space or yard.

Dwelling, patio: A one-family dwelling in which all or a portion of the area required for side and rear yards is consolidated into one or more garden court spaces attached to the dwelling unit.

Dwelling, single-family attached: A building containing two or more single-family attached dwelling units joined at one or more party walls or other common facilities (not including the walls of an enclosed courtyard or similar area) and with property lines separating each dwelling unit, thus permitting zero lot lines.

Dwelling, single-family detached: A building designed or constructed as a unit for residential occupancy for one family that is not attached to another dwelling by any means, is located on a single zoning lot surrounded by open space or yard.

Dwelling, townhouse: One of a group of three or more single-family attached dwelling units under fee simple or condominium or cooperative ownership, as defined by the laws of the State of Georgia, in which each unit has its own front and rear access to the outside, no unit is located over another unit, and each unit is separated from any other unit by one or more vertical common fire-resistant walls. For the purposes of this ordinance the term "townhouse dwelling" shall not include a single-story attached dwelling unit.

E

Easement: The right, grant or privilege of using another's property for purposes such as constructing and maintaining sanitary sewers, water mains, electric lines, telephone lines, storm sewers, gas lines, bicycle paths or other purposes requiring encroachment onto another's property.

Easement: Recorded authorization for a specified purpose by a property owner for the use of any designated part of the real property by another entity.

Eating establishment, fast food: Eating establishments where customers order and are served their food at a counter or in a motor vehicle in packed prepared to leave the premises. Consumption may be on or off-premise.

Eating establishment: A structure in which the use is preparation and sale of food and beverage. This does not include eating establishment, fast food. Drive though windows are not permitted. This use includes, but is not limited to, restaurants, cafes, coffee shops and bakeries.

Ecodevelopment: A proactive development approach, whereby actions such as incorporating natural topography, landscaping with native plant species, creating natural stormwater management systems and decreasing impervious cover are implemented in order to improve water quality, reduce infrastructure needs and to minimize the negative secondary effects on ecology caused by land development.

Elevation, front: The view of a building or group of buildings as seen from directly in front of the structure.

Equipment, heavy: Includes but is not limited to bulldozers, loaders, backhoes, bobcats, framing equipment or other similar machinery.

Erosion control regulations: The City of Griffin, Georgia Erosion and Sedimentation Control Ordinance.

Extended stay hotel/motel: Any building containing six or more guest rooms intended or designated to be used or which are used, rented or hired out to be occupied or which are occupied for sleeping purposes for guests and contain kitchen facilities for food preparation including but not limited to a refrigerator, stove or oven. Extended stay facilities may include lobbies, conference rooms, meeting rooms and child play areas.

F

Family day care: A home occupation in which shelter, care and supervision are provided for six or fewer children under the age of 18 on a regular basis for less than 24 hours per day. A family day care may provide basic educational instruction.

Family: Two or more individuals, related by blood, marriage or legal relationship, living together in a dwelling unit intended for single-family occupancy; two or more non-related individuals without disabilities as recognized by the Americans with Disabilities Act 42, U.S.C. section 12101, et seq., living together as a single housekeeping unit in a dwelling unit intended for single-family occupancy; or a combination of two or more related and non-related persons living together as a single housekeeping unit in a dwelling intended for single-family occupancy.

Farm goods: Goods produced on site including but not limited to crops, plants, trees, maintaining livestock, poultry or bees.

Farm operations: Commercial agricultural uses including crop production, dairy, stock, poultry, commercial greenhouse, livestock raising and other related uses with the necessary uses for treating or storing the products created on site, however this use should be secondary. This also includes related structures related to farming operations.

Farmer's market: The offering for sale of fresh agricultural products directly to the consumer at an open air market occurring at a pre-determined area where the vendors are generally individuals who raised the vegetables or produce. This does not include second hand goods or meats.

Farmstand: A building or structure used for retail sales of fresh fruit, vegetable, flowers, herbs or plants not to exceed 500 gross square feet. May also include the sale of other unprocessed foodstuffs such as jams, jellies, pickles, baked goods or handi-crafts. No commercially processed or packed items shall be sold at a farmstand.

Feather Banner: A banner made from lightweight material and attached to a pole and is designed to wave in the wind.

Feed store: An establishment engaged in retail sale of supplies and agricultural products including the bulk storage of fertilizers and related agrichemicals.

Final plan or plan: A detailed engineering drawing(s) showing the proposed improvements required in the development of a given parcel and demonstrating compliance with the requirements of these regulations and other law, prepared by a qualified design professional who is licensed to prepare such in accordance with state law.

Financial institution: A bank, savings and loan, credit union, mortgage office or automated teller machine (ATM). Financial institutions shall not include stand alone currency exchange, check cashing establishment or pawn shop.

Finish floor elevation (FFE): The elevation at which the building foundation meets the prevailing ground surface

Flood boundary, 100-year: Those areas of the City of Griffin having a one percent chance or greater of being partially or completely inundated by flood waters, either from a defined river, creek or stream or from the unusual and rapid accumulation of runoff or surface water from any sources. For purposes of this ordinance, the 100-year flood plan shall be as shown on flood hazard boundary maps, published by the Federal Emergency Management Agency or as determined from formal flood hazard studies prepared by the City of Griffin Public Works and Utilities Department.

Flood hazard area: Any normally dry area that is susceptible to being inundated by water. The flood hazard areas include, but are not limited to, land subject to the 100-year flood.

Flood peak: The maximum discharge of a particular flood at a given point along a stream.

Floodplain: Any plain which borders a stream channel and is covered by its water in time of flood; stream bed areas subject to recurrent overflow, or inundation.

Floodway: The channel of a river, stream or other watercourse and the adjacent land area that must be reserved to discharge the 100-year flood without cumulatively increasing the water surface elevation more than one foot at any point.

Floor area: The heated space of a dwelling, which is exclusive of attic, unfinished basement, garage, carport, patio and open porches measured from the exterior face of the exterior walls or a dwelling. Also, the gross leasable floor area for any business or industry based on interior dimensions.

Fps: Feet per second.

Frontage: Distance of lot as measured along the right-of-way.

Funeral Home: A building or part of a building used for human funeral services. Such facility may contain space and facilities for embalming and the performance of other services used in the preparation of the dead for burial, the performance of autopsies and other surgical procedures, the storage of caskets and other related funeral supplies, the storage of funeral vehicles not including cremation services.

G

Garage, major repair: General repair, rebuilding, or reconditioning of engines, motor vehicles, or trailers, including body work, framework, welding, and major painting services.

Garage, minor repair: The replacement of any part or any part that does not include removal of the engine head pan, engine transmission or differential; incidental body work and fender work, minor painting and upholstery service. Above stated is applied to passenger automobiles and trucks not in excess of 7,000 pounds gross weight.

Garage, repair: A public garage intended to be used to make major commercial automobile or other motor vehicle repairs; provided, that all body work and painting shall be conducted within fully enclosed buildings and further provided there is no open storage of junked, wrecked vehicles, dismantled parts or supplies visible beyond the premises.

Gender: The masculine gender shall include the feminine and neuter.

Georgia DOT or GDOT: The (State of) Georgia Department of Transportation.

Gph: Gallons per hour.

Gpm: Gallons per minute.

Grading: The movement, removal or addition of earth on a site by the use of mechanical equipment.

Greenhouse: Retail business whose primary activity is the selling of plants grown on the site and having enclosed and open space for growing or display.

Group home for disabled persons: A residential use or facility, located in a single-family dwelling, where non-related persons with a disability recognized by The Americans with Disabilities Act, 42

U.S.C. section 12101, et seq., may live together in a residential setting, free from discrimination in local governmental rules, policies, practices or services, except as would constitute a direct threat to the health and safety of the occupants or other individuals.

Grubbing: The removal of vegetation by methods such as digging, raking, dragging or otherwise disturbing the roots of vegetation.

Guest house: A detached accessory dwelling unit located on the same lot with a single-family dwelling. The square foot area of a guess house may not exceed 1,000 square feet in floor area and may only be used by non-paying guests or relatives of the owners or occupants of the principal building. The guest house shall not be rented or otherwise occupied as a separate dwelling.

H

Halfway house: A halfway house provides a structured living environment for persons learning to adjust to society after being imprisoned.

Headwater: (A) The water upstream from a structure; (B) the source of a stream.

Health department: The Spalding County Health Department.

Heated floor area: The finished area within a building or structure that is heated by the main central heating system installed to serve said building or structure. For example, the floor area of an unfinished basement or garage is not included in determining the amount of heated floor area of a residential dwelling.

Home occupation: An occupation or activity for gain or support conducted by a member of the family residing on the premises with which there is:

- **a.** No group instruction, assembly or activity, and no signage is used to indicate from the exterior that the building is being utilized in any part for any purpose other than that of a dwelling;
- **b.** There is no commodity sold upon the premises;
- **c.** No person is employed other than a member of the immediate family residing on the premises;
- **d.** No mechanical equipment is used except that which is normally used for purely domestic purposes.

Homeless shelter: Charitable, non-profit, short-term housing and/or room and board accommodations for the homeless for which there is no charge, monetary or other to the person being provided such temporary housing.

Hospice: A home-like facility for the care of terminally ill patients in which food, shelter and nursing care is provided.

Hospital: Any institution receiving in-patients or a public institution receiving out-patients and authorized under Georgia law to render medical, surgical and/or obstetrical care. Cremation services can be provided as an accessory use.

Hotel: A facility offering transient lodging accommodations to the general public and providing additional services such as restaurants, meeting rooms, entertainment and recreational facilities.

HUD: The U.S. Department of Housing and Urban Development.

Hydrology: The science of dealing with the waters of the earth in their various forms, precipitation, evaporation, runoff and storage.

I

Impervious surface: Any material or surface that prevents absorption or infiltration of stormwater into the ground. Includes, but is not limited to, buildings, accessory structures, driveways of asphalt or concrete surface, parking lots and sidewalks.

Imperviousness: The quality or condition of a material that minimizes percolation.

Industrialized building: A factory-fabricated dwelling or commercial unit built in one or more sections designed to fit together on a permanent foundation but which usually does not originally have wheels for movement and which is constructed in accordance with the Georgia Industrialized Building Act which bears the seal of approval issued by DCA.

Institutional use: A building, facility or land owned by a government, non-profit corporation, association or entity, intended for public or semi-public use, such as courthouses, schools, churches, parks and recreation areas.

Interpretation: In the interpretation and application of any provision of this Code, it shall be held to be the minimum requirements adopted for the promotion of the public health, safety, comfort, convenience and general welfare. Where any provision of the Code imposes greater restrictions upon the subject matter than the general provision imposed by the Code, the provision imposing the greater restriction or regulation shall be deemed to be controlling.

Interstate: A divided major highway with full control of access and with no crossings at grade. These roads are designated interstate by the Georgia Department of Transportation.

Invert: The floor, bottom or lowest part of the internal cross-section of conduit.

J

Jack arch: Architectural term for a flat arch.

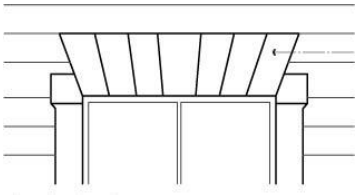

2. 7 JACK ARCH

Joint authority: A joint authority given to any number of persons or officers may be executed by a majority of them, unless it is otherwise declared.

Junk yard: Any use on private property involving the parking, storage or disassembly of junked vehicles or wrecked or non-operable automobiles, trucks or other vehicles; storage, bailing or otherwise dealing in junk, animal hides, scrap iron or other metals, used paper, used cloth, used plumbing fixtures, old stoves, old refrigerators and other old household appliances, used brick, wood or other building materials. These uses shall be considered junk yards whether or not all or parts of these operations are conducted inside a building or in conjunction with, in addition to or accessory to, other use of the premises.

Junked vehicle: Any wrecked or non-operable automobile, truck or other vehicle, which does not bear a current license plate.

K

Keeper* and *proprietor: The terms "keeper" and "proprietor" mean and include persons, firms, associations, corporations, clubs and co-partnerships, whether acting by themselves or as a servant, agent or employee.

Kennel: A commercial facility where boarding, caring for and keeping of dogs or cats or other animals or combination thereof is carried on for the purpose of providing an income or revenue.

L

Land area per dwelling unit: The amount of land in square feet required for each dwelling unit permitted on a zoning lot.

Land disturbance: Any land or vegetation change, including, but not limited to, clearing, grubbing, stripping, removal of vegetation, dredging, grading, excavating, transporting, and filling of land, that do not involve construction, paving or any other installation of impervious cover.

Laundromat: A facility where patrons wash, dry, or dry clean clothing or other fabrics in machines operated by the patron.

Licensed land surveyor: A person who, by reason of his knowledge of the several sciences and of the principles of land surveying acquired by practical experience and formal education, is qualified to engage in the practice of land surveying, as attested by the issuance to said person of a license as a land surveyor by the State of Georgia.

Licensed landscape architect: A person who, by reason of his special knowledge of natural, physical and mathematical sciences and the principles and methodology of landscape architectural design acquired by practical experience and formal education or both, is qualified to engage in the practice of landscape architecture, as attested by the issuance to said person of a license as a landscape architect by the State of Georgia.

Light industrial use: Any use which involves manufacturing, processing, assembly or storage operations where all operations are conducted entirely within a building and no noise, vibration, smoke, gas, fume, odor, dust, fire hazard, radiation or other injurious or obnoxious condition related to the operation creates a nuisance beyond the premises.

Lintel: A horizontal architectural member spanning and usually carrying the load above an opening

Liner building: A liner building is a specialized building, parallel to the street, which is designed to conceal an area such as a parking lot or loading dock.

Loading space or area: Space logically and conveniently located for pickup and delivery service, scaled to the vehicles expected to be used and accessible to such vehicles at all times. Also defined as an area to provide safe loading and unloading of passengers such as a day care facility or church.

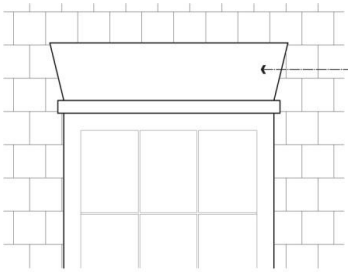

2. 8 LINTEL

Loading, off-street: An unobstructed area provided and maintained for the temporary parking of trucks and other motor vehicles for the purpose of loading and unloading goods, wares, materials and merchandise.

Local street: Streets that represent the lowest category of the functional classification system. Local streets are used primarily for direct access to residential, commercial, industrial or other abutting property. They do not include streets carrying through traffic.

Loft apartment: An apartment(s) customarily located on the second story of a retail business or professional office located in the commercial business district (CBD) or in some instances the planned commercial development (PCD) zoning districts.

Lot: A recorded area of land under one ownership of at least sufficient size to meet minimum zoning requirements for use, coverage and area and to provide such yards and other open spaces as are required by the zoning ordinance, as well as certain nonconforming lots of record exempted by the zoning ordinance. Such lots shall have frontage on a public street or on an approved private street as set out in the zoning ordinance and may consist of:

- **a.** A single lot of record;
- **b.** A portion of a lot of record;
- **c.** A combination of complete lots of record or complete lots of record and portions of lots of record or of portions of lots of record;
- **d.** A parcel of land described by metes and bounds.
- **e.** In the case of divisions, boundary adjustment, or consolidation shall no residential area of land be created which does not meet the requirements of the zoning ordinance. The grant of an interest, for security or other purpose, in real property for less than an entire lot, or the foreclosure or sale of such interest, shall not be deemed to create a legal lot unless property approved, by variance, granted by the board of commissioners, in accordance with these regulations and the zoning ordinance.

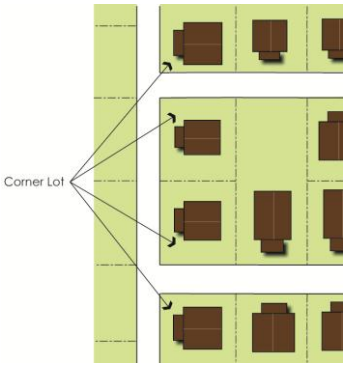

***Lot, corner**:* A lot having frontage at the intersection of two or more public streets.

2. 9 CORNER LOT

Lot, corner (double-frontage): A lot located at the junction of two or more intersection streets, having an interior angle of less than 135 degrees, with a boundary line thereof bordering on two of the streets.

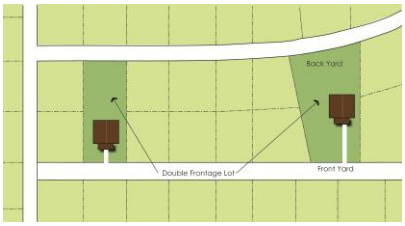

2. 10 DOUBLE FRONTAGE

Lot, flag: A lot whose access is provided to the bulk of the lot by means of a narrow corridor or panhandle and does not meet the normally required minimum lot width.

Lot, interior: A lot, other than a corner lot, with frontage on only one lot.

***Lot, nonconforming**:* A lot that has less than the minimum area or minimum dimensions required in the zone in which the lot is located.

***Lot, through**:* A lot that fronts upon two parallel streets or that fronts upon two streets that do not intersect at the boundaries of the lot.

***Lot coverage**:* That portion of the lot that is covered by principal structures, accessory buildings and impervious surface, including, but not limited to, driveways of asphalt or concrete, parking areas, walkways and sidewalks.

***Lot depth**:* The mean horizontal distance between the front and rear lot lines, measured in the general direction of the side lot lines.

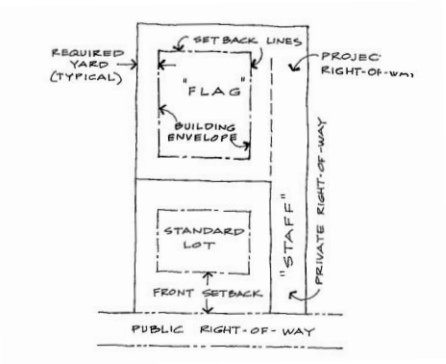

2. 11 FLAG LOT

***Lot line**:* A boundary of record that divides one lot from another or from a public or private street or any other space.

Lot line: A line defining the ownership boundary of a lot.

***Lot of record**:* A lot that exists as shown or described on a plat or deed in the records of the Office of the Clerk of the Superior Court of Spalding County.

***Lot width**:* The distance between side lot lines measured at the front building line.

Lot width: Distance between the side lot lines measured as a tangent to the front building line as described by the zoning ordinance.

M

Major collector street: The part of the road classification system that serves as the principal network for through traffic flow. Major collectors have a primary function of providing neighborhood linkages and aggregating traffic, then carrying it to the arterial street system. They may also penetrate a neighborhood, distributing trips to ultimate destinations and in a few instances providing direct access to individual abutting property.

***Manufactured home**:* A structure transportable in one or more sections and which is built on a permanent chassis and designed to be used as a dwelling with or without a permanent foundation when connected to the required utilities and includes the plumbing, heating, air-conditioning and electrical systems, contained therein. Such dwelling is regulated by the manufactured home construction and safety standards established under the National Manufactured Home Construction and Safety Standards Act adopted in 1976, bearing an insignia issued by U.S. Department of Housing and Urban Development (HUD).

Manufacturing: The mechanical or chemical transformation of materials or substances into new products, including the assembling of component parts, the manufacturing of products, the blending of materials, such as lubricating oils, plastics, resins, or liquors. This includes processing, assembly and storage operations.

Master plan: A comprehensive plan, which may consist of several maps, data and other descriptive matter for the physical development of the city or any portion thereof. This includes any amendments, extensions or additions thereof recommended by the city manager and adopted by the board of commissioners indicating the general location for major roads, parks or other public open spaces, public building sites, routes for public, utilities, zoning districts or other similar information.

Mean sea level: The average height of the sea for all states of the tide. It is used as a reference for establishing various elevations within the floodplain. For purposes of these regulations, the term is synonymous with National Geodetic Vertical Datum (NGVD).

Minor collector street: The part of the road classification system designed primarily to serve the collection function for a group of local streets. Additionally, it provides direct access to individual abutting property. Minor collectors are not meant to handle long through trips.

Mixed use: A building or development containing more than one permitted use. Multiple uses are allowed to be stacked vertically and contained in the same building.

Month, year: The terms "month" and "year" mean calendar month and calendar year unless otherwise provided.

Motel: An establishment providing temporary or overnight sleeping accommodations for the traveling public with a majority of all rooms having direct access to the outside without the necessity of passing through the main lobby of the building.

Municipal court: The term "municipal court" means the Municipal Court of the City of Griffin.

N

Names of officers, departments: The name or title of any officer or department shall be read as though the words "of the City of Griffin" were added.

National Manufactured Home Construction and Safety Standards: The national building code for all manufactured homes built since June 15, 1976, written and administered by the U.S. Department of Housing and Urban Development (also known as the "HUD" Code").

Neighborhood retail, service or office uses: Intended to serve or accommodate the needs of a specific segment of the community or area. Establishments primarily engaged in the provision of frequently or recurrently needed goods for household consumption, such as prepackaged food and beverage and limited household supplies and hardware. These establishments shall not exceed 5,000 square feet. These services are primarily for the residents of the HDR-A district provided that they are conducted entirely within a wholly and permanently enclosed building or buildings which shall be of architectural design compatible to the dwellings within the HDR-A development.

Newspaper publishing facility: A commercial printing operation involving a process that is considered printing, imprinting, reproducing or duplicating images and using printing methods including but not limited to offset printing, lithography, web offset, flexographic, and screen process printing.

Non-conforming building or structure: An existing building or structure erected or constructed prior to adoption of this ordinance, or the adoption of any amendment hereto, on a lot now zoned so that such building or structure could not be built or constructed.

Non-conforming use: A use of land existing at the time of the adoption of this ordinance, or the adoption of any amendment hereto that was lawful at the time the use of land was initiated, but which has been rendered unlawful by the adoption or amendment of this ordinance.

Nontechnical and technical words: The ordinary significance shall be applied to all words, except words of art, or words connected with a particular trade or subject matter, in which case they shall have the significance attached to them by experts in such trade, or with reference to the subject matter.

Number: The singular or plural number shall each include the other, unless expressly excluded.

Nursery: See Greenhouse.

***Nursing home facility**:* Housing for elderly, chronically or terminally ill persons in which food, shelter and nursing care if provided for compensation.

Nursing Home: A home licensed by the state for the aged or chronically or incurably ill persons in which five or more such persons not of the immediate family are provided with food, shelter and care for compensation or a non-profit, but not including hospitals, clinics or similar institutions devoted primarily to the diagnosis and treatment of the sick or injured.

O

O.C.G.A: The abbreviation "O.C.G.A." means the Official Code of Georgia Annotated, as amended.

***Oath**:* The term "oath" includes the term "affirmation."

***Office, professional**:* Includes, but is not limited to, offices for accounting, architectural, auditing, bookkeeping, engineering, finance, insurance, law, medical and real estate professions.

***Office, temporary**:* A manufactured or modular building, which is used as a sales office, no-site construction management office or related functions.

***Official zoning map**:* The map officially adopted contemporaneously with and as an integral part of this zoning ordinance that conclusively shows the location and boundaries of all zoned districts existing at the time of adoption of this ordinance and the adoption of future amendments thereto which reclassifies land by districts.

***Open space**:* Any parcel or area of land or water essentially unimproved and set aside, dedicated, designated or reserved for public or private use or enjoyment or for the use and enjoyment of owners and occupants of land adjoining or neighboring such open space or for the preservation and protection of environmentally sensitive land areas or natural land features.

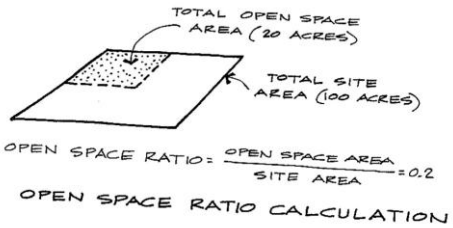

2. 12 OPEN SPACE

***Or, and**:* The term "or" may be read "and," and the term "and" may be read "or" if the sense requires it.

***Ordinance**:* This ordinance and all future amendments thereto, together with the official zoning map adopted contemporaneous with this ordinance.

***Outdoor display**:* The displaying of goods or merchandise outdoors on the property with the intent to advertise for sale.

***Outdoor storage**:* The keeping, in an unenclosed area, of any goods, salvage, material, merchandise, storage trailers or vehicles outdoors on the property for more than 24 hours. The term "outdoor storage" shall not include the keeping of vehicles or manufactured housing structures on sales lots in districts which allow such sales lots.

***Outparcel**:* A portion of a larger parcel of land generally designed as a site for a separate structure and business from the larger tract. An outparcel may or may not be a subdivision of a larger parcel. To be recognized as an outparcel, the portion must be identified on a site plan approved for the larger parcel.

***Owner**:* The term "owner," applied to a building or land, shall include any part owner, joint owner, tenant in common, tenant in partnership or joint tenant of the whole or of a part of such building or land.

P

Parking lot: An off-street surfaced ground level area for the temporary storage of operable passenger and commercial vehicles whether for compensation or free.

***Parking spaces**:* An area for off-street automobile parking.

Parking Structure (deck): Parking spaces and adjacent access drives, aisles, and ramps that are located in a structure with two or more levels.

Pawnshop*:* Any business that loans money on deposit of personal property or deals in the purchase or possession of personal property on condition of selling the same back again to the pledger or depositor, or loans or advances money on personal property by taking chattel mortgage security thereon, and takes or receives such personal property.

Pediment: A pediment is a low-pitched triangular gable on the front of some buildings in the Grecian or Greek Revival style of architecture.

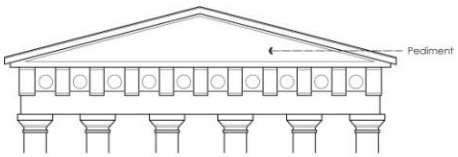

2. 13 PEDIMENT

Permitted use*:* Any use allowed as a matter of right in a zoning district and subject to the restrictions applicable to that zoning district classifications.

Person*:* As used in this ordinance, the term "person" shall mean an individual, group of individuals, and all forms of legal entities recognized by Georgia law as having the ability to own property, transact business or sue and be used.

Personal care home*:* A residential use or facility, located in a single-family dwelling, whether operated for profit or not, which undertakes through its ownership or management, for compensation, to provide personal services, protective care and oversight of ambulatory, non-related persons who need a monitored environment but who do not have injuries or disabilities which require chronic or convalescent are, including medical, nursing, or intermediate care. Personal services include, but are not limited to, individual assistance with or supervision in areas of nutrition, medication and provision of transient medical care. Personal care homes may include those facilities which monitor resident's daily functioning and location and have the capability for crisis intervention. Such term does not include:

- **a.** Old age residences which are devoted to independent living units with kitchen facilities in which residents have the option of preparing and serving some or all of their own meals;
- **b.** Boarding facilities which do not provide personal care; or
- **c.** Group homes for disabled persons, as defined by the Fair Housing Act Amendments of 1988, 42 U.S.C. section 3601, et seq.

Personal service establishment: Enterprises serving individual necessities of a non-medical nature including, but not limited to, beauty and barber shops, tanning, dry cleaning pick-up(retail), shoe repair, spa, locksmith and other similar establishments. These may also include retail sales of products related to the services provided.

Places of public assembly: A structure, portion of a structure or area (either indoor or outdoor), including, but not limited to, movie theaters; concert halls; stadiums; amusement parks; carnivals; churches; elementary, middle, high, secondary and post graduate schools; day care centers; private commercial schools, such as martial arts or dance studios; clubs, lodges and arenas, designed primarily for people to gather to observe or participate in a single event or series of single events, including but not limited to the presentation of a motion picture, a concert, an educational presentation, a sermon, an inspirational presentation, a rally, a lecture, a drama, dance, musical or other live performance, or a sporting event.

Places of worship: Places where religious institutions provide assembly with a seating capacity and a sanctuary or main activity area.

Planned development*:* A tract of land developed under a single ownership or control based on a plan which allows for flexibility of design not available under normal zoning district requirements.

Planned shopping development*:* Two or more commercial establishments with a total gross floor area of at least 40,000 square feet planned and managed as a single unit with off-street parking and loading facilities provided on the property.

Planning and zoning board (PZB)*:* The City of Griffin, Georgia Planning and Zoning Board appointed by the board of board of commissioners.

Plat: A map, plan or layout of a county, city, town section, subdivision or development certified by a registered surveyor indicating the location and boundaries of a property or properties. See also site plan.

***Preceding, following**:* The terms "preceding" and "following" mean generally next before and next after unless the context requires a different significance.

Private or public club, lodge, social center or meeting room: Building or facility for the purpose of social, educational, or recreational purpose.

Professional or design professional: An individual who meets state licensure requirements applicable to the profession or practice he is engaged in.

Project: A principal building or structure or group of buildings or structures planned and designed as an interdependent unit together with all accessory uses or structures, utilities, drainage, access and circulation facilities, whether built in whole or phases. Examples include: a principal building on a lot, a residential subdivision, a multi-family development, a shopping center or an office park.

Property owner: Any person who owns fee title to a given area of land, excluding, however, any recorded easement or right-of-way.

***Property**:* The term "property" includes real and personal property.

Psi: Pounds per square inch.

***Public place**:* The term "public place" means any place that the public is invited or permitted to go or congregate.

R

***Radio and/or television and/or transmission tower**:* Any exterior apparatus designed for telephone, radio, or television communications or data transmission through the sending and/or receiving of electromagnetic waves.

***Recreational vehicle**:* Any type of portable structure without a permanent foundation, which can be towed, hauled or is self-propelled, and designed for temporary living accommodations for recreational, camping and travel use, including, but not limited to, travel trailers, truck campers (on or off the truck), camping trailers, buses and motor homes.

***Recycling center, collection**:* Any facility utilized for the purpose of collecting materials to be recycled including, but not limited, plastics, glass, paper and aluminum materials. Such use may be principal or accessory to a non-residential use on non-residentially zoned property.

Religious activity: A use of land involving the exercise of religious believers [beliefs], practices or worship. It is not the intent of this ordinance to regulate religious activity or to impede any person's exercise of religious beliefs.

Repair garage, heavy equipment: A use which may provide a full range of repairs and services including, but not limited to, major overhauls, engine repair, rebuilding and replacement on heavy duty trucks and equipment and may include paint and body shops. The outside storage of unlicensed and unregistered vehicles is prohibited as part of this use.

Research or experimental laboratory: An establishment which conducts research, development or controlled production of high technology electronic, industrial or scientific products or commodities for sale or a laboratory conducting educational/ medical research or testing. This term includes but is not limited to a biotechnology firm or manufacturer of non-toxic computer components.

Residential industrialized building: Any structure or component thereof which is wholly or in substantial part made, fabricated, formed or assembled in manufacturing facilities for installation or assembly and installation on a building site and has been manufactured in such a manner that all parts or processes cannot be inspected at the installation site without disassembly, damage to, or destruction thereof; which bears an insignia of approval issued by the Georgia Department of Community Affairs; and which is used or intended to be used as a dwelling units.

Residential: Pertaining to the use of land, means premises such as single-family detached and attached homes, patio homes, townhouses, manufactured or modular homes, duplexes, condominiums or apartment complexes, which contain habitable rooms for non-transient occupancy and which are designed primarily for living, sleeping, cooking and eating therein.

Responsible party: In the context of enforcement procedures, a person who is alleged to have committed, causes, continued or created a violation of the terms, requirements, regulations, or

provisions of these regulations whether as a direct act, through lack of action or neglect, or at the direction of or on behalf of others. A responsible party may be the owner of a premises where a violation has occurred; an occupant whether through ownership, lease or other tenancy; a contractor, building or developer; an agent of or person otherwise acting on behalf of the aforementioned parties; or other person acting in violation of these regulations.

***Retail business**:* A business consisting primarily of buying merchandise or articles in gross and selling to general consumers in small quantities not in bulk and not for resale. These businesses include but are not limited to clothing shops, florists, home goods, drugstore.

Retail business, heavy equipment: The sale or rental of heavy equipment. Heavy equipment includes but is not limited to backhoe, crane, wheel loader, bulldozer, forklift and other similar equipment.

***Retail, large-scale**:* All retail sales and service uses on sites that include more than 74,999 square feet of gross floor area (in aggregate).

***Retirement center**:* A residential apartment or fee simple housing development built exclusively for senior citizens whereby typically a dining facility, aquatic and or fitness center, library and community activities are incorporated in the development and independent living is promoted.

Return cornice: The continuation of a cornice in a different direction, as at the gable end of a house.

***Right-of-way**:* A strip of land designated, reserved, dedicated or purchased for the purpose of pedestrian or vehicular access, utility line installation or other use.

Road classification map: Comprehensive plan of arterial, collector and minor streets and roads for all or a portion of the city.

Runoff coefficient: The rate of runoff to precipitation.

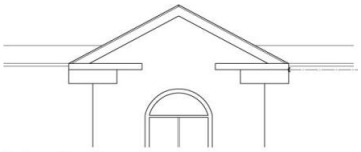

2. 14 RETURN CORNICE

S

***Salvage yard**:* Use of property for outdoor storage, keeping, abandonment, sale or resale of salvage including scrap metal, used lumber, salvaged house wrecking and structural steel materials and equipment or for the dismantling, demolition or abandonment of automobiles or other vehicles or machinery or parts thereof.

***Schedule of fees and charges**:* The phrase "schedule of fees and charges" means the official consolidated list compiled and published by the city which contains rates for utility and other public enterprises, fees, deposit amounts, performance bonds, and various charges as determined from time to time by the board of commissioners, an official copy of which is maintained in the office of the city clerk where it is available for reference and review during normal business hours.

***School**:* A facility where persons regularly assembly for the purpose of instruction or education including any playgrounds, stadiums or other structures and grounds used in conjunction therewith. The term "school" shall include, but is not limited to, public and private schools used for pre-kindergarten, primary, secondary, or post-secondary education.

***Seating, minimum**:* Where this Code requires seating for a minimum number of persons, only chairs, stools and booths shall be provided as the required seating. The capacity of seats without dividing arms shall be determined by allotting 18 inches per occupant.

***Security bars**:* Metal bars, including, but not limited to, wrought iron guards and sliding scissor gates, attached to or covering a window or glass door which are intended to provide additional protection against vandalism and burglaries.

Segmental arch: A shallow arch; an arch that is less than a semicircle.

Self-storage: A building or group of buildings divided into separate compartments used to meet the temporary storage needs of small businesses or for personal use and may include refrigeration facilities.

***Service station**:* A use which provides for the sale of motor vehicle fuels and automobile accessories and which may provide minor repair and maintenance services. A service station shall be limited to two

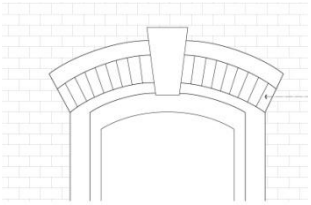

2. 15 SEGMENTAL ARCH

bays.

***Setback line**:* The minimum required distance from any lot line that establishes the area within which the principal structure may be erected or placed.

***Shall, may**:* The term "shall" is always mandatory and not merely directory; the term "may" is permissive.

***Sidewalk**:* The term "sidewalk" means any portion of a street between the curbline and the adjacent property line, intended for the use of pedestrians, excluding parkways.

Sight triangle: A triangular-shaped portion of land established at street intersections in which nothing is erected, placed, planted, or allowed to grow in such a manner as to limit or obstruct the sight distance of motorists entering or leaving the intersection.

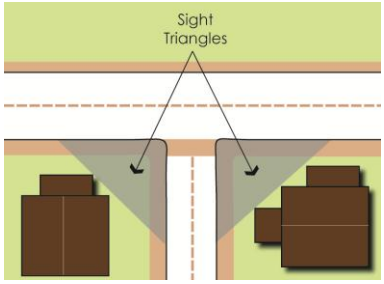

2. 16 SIGHT TRIANGLES

***Sign**:* Any name, identification, description, display, illustration or device that is affixed to, posted on or represented directly or indirectly upon a building, structure, land, vehicle or otherwise affixed for display in view of the general public and that directs attention to a product, place, activity, idea, person, institution or business.

***Signature* and *subscription**:* The terms "signature" and "subscription" include the mark of all illiterate or infirm persons.

Site plan, final and subdivision (construction drawings): Engineered plans and necessary supporting documents required for a proposed project to constitute the complete application for construction approval. Plans shall include complete and detailed engineering and layout drawings for all public and private improvements and utilities, in addition to any ancillary calculations.

Site plan, minor: An engineered drawing proposed improvements to a site of less than 1.1 acres on which the city has not previously approved a site plan, or on which there is an existing approved plan that has been closed (built). The improvements must be minor in nature and generally, (1) not change the internal or external traffic flow patterns; (2) not increase the number of dwelling units; (3) not increase the non residential building size by more than 2,500 square feet or 75 percent of the gross building area, whichever is less; and (4) generally, the proposed disturbed area should not exceed 5,000 square feet. The applicant must provide the department of stormwater an impervious site change form noting the limits of additional impervious area on the site.

Site plan, preliminary residential and subdivision: Engineered plans required for all residential projects resulting in the creation of three or more lots or any new development involving 1.1 acres or more. Preliminary plans must show general design of a site development or subdivision project and its public improvements including, but not limited to, location and width of streets and structures and their general relationship to the topography of the land; water and sanitary sewer, drainage, lot sizes and arrangement, future development (if applicable) and location and use of adjoining property.

Site plan: A final construction plan, other than a final subdivision final plan, providing a graphic portrayal of a proposed development describing both existing and proposed conditions of the lot(s), including, but not limited to, use, location and bulk of buildings and structures, density of development, public facilities, means of ingress and egress, landscaping, signs, drainage and lighting.

Site work: Development activity to prepare a property for construction of buildings or finished structures, including clearing, grubbing, grading and installation of soil erosion and sedimentation control facilities.

Soil erosion and sedimentation control regulations: That section of the soil erosion and sedimentation control ordinance dealing with sediment control during construction. These regulations are enforced by the public works and stormwater departments.

Soldier course: A course of bricks laid on their ends so that only their long sides are vertical.

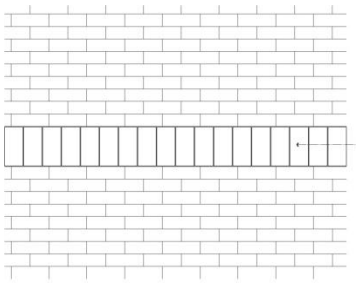
2. 17 SOLDIER COURSE

***Special use**:* A use which within certain zoning districts specified by this ordinance is not permitted as a matter of right but may be

permitted within a district by approval of the board of board of commissioners, following a public hearing at which the commission reviews the proposed plans for the use, its location, design, relationship to adjacent properties, and other conditions peculiar to the proposal which may adversely affect adjoining property, under objective criteria; has found the proposal not to be in conflict with the intent of this ordinance; and has approved the use as specified. A special use permit is valid for a period of one year from the date of approval.

***State**:* Whenever the terms "state," "the state" and "this state" are used, they shall refer to the State of Georgia.

Storefront: Display windows of a building housing a commercial use visible from a street, sidewalk, or other pedestrian way accessible to the public, or adjacent to public or private property.

Storm drainage system: Any structure used principally to retain, detain, collect, direct, transfer, carry, convey, distribute or treat, singularly or in combination, storm water or other surface water, including, but not limited to, aprons, basins, berms, BMP facilities, catchments, conduits, culverts, dams, dikes, ditches, drains, drops, filters, grates, infiltration devices, inlets, manholes, man-made channels, outlets, pipes, ponds, rip-rap, risers, spillways, storm sewers, swales and trenches; and also including any maintenance easements needed for such structures.

***Street**:* A right-of-way generally intended for the movement of vehicular and pedestrian traffic and which serves as point of access to abutting property. The term "street" includes streets, sidewalks, avenues, boulevards, roads, alleys, lanes and all other public highways in the city, unless otherwise provided. Street type is officially defined according to the city's road classification map.

***Street, classification**:* As described in the City of Griffin Comprehensive Transportation Plan adopted October 2002:

a. *Arterials* connect activity centers and carry large volumes of traffic at moderate speeds. The arterial system in Griffin includes US 19/41, SR 16, SR 155, SR 92 and Bus 19/41.

b. *Collectors* provide access to activity centers from residential areas. Their purpose is to collect traffic from streets in residential and commercial areas and distribute the traffic to the arterial system. The collector system in Griffin includes Meriwether Street, College Street, Poplar Street, Solomon Street, Experiment Street, Broad Street, Maple Drive, McIntosh Road, Old Atlanta Highway and North Hill St.

c. *Local streets* feed the collector system from low volume residential and commercial areas. The remaining roadways in the city are classified as local streets. The majority of Griffin's roadway system is classified as local streets.

***Structure, accessory**:* A subordinate structure, customarily incidental to a principal structure or use and is located on the same lot. Examples of accessory structures in residential districts shall include tool sheds, storage buildings or detached garages.

***Structure, principal**:* A structure in which the principal use or purpose on a property occurs, and to which all other structures on the property are subordinate. Principal may also mean the main or primary structure.

***Structure**:* Anything constructed, erected or placed with a fixed location on or in the ground or attached to something having a fixed location on the ground. The term "structure" shall include, but is not limited to, buildings, manufactured or modular homes, signs, swimming pools or fall-out shelters. Privacy walls or fences shall not be considered structures.

Subdivision: All divisions of a tract or parcel of land into two or more lots, building sites, or other divisions for the purpose, whether immediate or future, of sale, or building development and includes all division of land involving a new street or a chance in existing streets and includes re-subdivision and, where appropriate to the context relates to the process of subdividing or to the land or area subdivided. The term includes replatting of any division of land involving a new street, or a change in existing streets.

Subdivision, boundary adjustment plan: A legal document, prepared by a qualified professional licensed to prepare such in the State of Georgia, for the purpose of the legal reconfiguring of contiguous lots in the same ownership.

Subdivision, boundary adjustment: The adjusting of common property line(s) or boundaries between adjacent lots, tracts, or parcels for the purpose of accommodating a transfer of land,

rectifying a disputed property line location, or freeing such a disputed property line location, or freeing such a boundary from any difference or discrepancies. The resulting adjustment shall not create any additional lots and all reconfigured lots shall contain sufficient area and dimension to meet minimum requirements for zoning and building purposes. (See also consolidation subdivision)

Subdivision, consolidation plan: A legal document, prepared by a qualified professional licensed to prepare such in the State of Georgia, for the purpose of the legal removal of common property lines between abutting lots in the same ownership.

Subdivision, consolidation: The removal of common property lines between abutting lots in the same ownership. (See also boundary adjustment subdivision)

Subdivision, major: Any subdivision that does not meet the requirements of a minor subdivision.

Subdivision, minor: Any subdivision that does not result in the creation of more than three lots out of one or more lots, and does not require the construction of new streets or public water or sewer mains.

Substantial compliance: A substantial compliance with any requirement of this Code or ordinances amendatory thereof, especially on the part of public officers, shall be deemed and held sufficient; and no proceeding shall be declared void for want of such compliance, unless expressly so provided.

SWM facility: Any storm drainage facility that is designed or otherwise intended to, or that actually does, detain or retain stormwater or other surface water. When this term is used in the text of these regulations, all portions of such a facility shall be considered as included.

SWM: Stormwater management.

T

Tenant* and *occupant: The terms "tenant" and "occupant," applied to a building or land, shall include any person holding a written or oral lease of, or who occupied, the whole or a part of such building or land, either alone or with others.

Time of concentration: The time it takes for runoff to travel from the hydraulically most distant part of the watershed to the point of reference.

Title Pawn: A title pawn is an act of using a vehicle title to acquire a pay day loan.

Traffic study: An analysis conducted to assess the impact of vehicular traffic generated by a new use or change in use on existing or future road network and to obtain the required information in evaluating any potential road network improvements.

Transit Station: A commercial or public facility for the loading or unloading of passengers, luggage, and packages including sales of fares and which include accessory restaurants, indoor commercial businesses but not including airports. This facility operates a system of regularly scheduled buses and /or trains available to the public.

Transitional housing facility: A building or buildings in which is provided long-term but no permanent living accommodations for more than six (6) persons who have no permanent residence and are in need of long-term housing assistance.

Transom: A bar of wood or stone across the top of a door or window

Tree protection ordinance: The City of Griffin, tree protection ordinance concerning the planting or removal of trees. The City of Griffin Tree Board enforces the tree ordinance. All planting and removal of trees within city right-of-way requires the permission of the tree board.

Truck terminal: A primary use of property where trucks/trailers are temporarily stored, maintained or based. Trucks/trailers shall have current registration and license plats with decal.

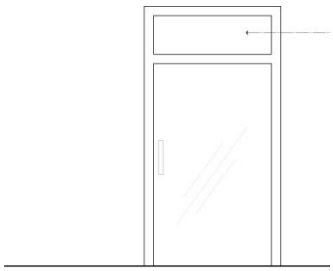

2. 18 TRANSOM

U

Urgent care: The delivery of ambulatory care in a facility dedicated to the delivery of medical care outside of a hospital emergency department, usually on an unscheduled, walk-in basis. Urgent care centers are primarily used to treat patients who have an injury or illness that requires immediate care but is not serious enough to warrant a visit to an emergency room. Often urgent care centers are not open on a continuous basis, unlike a hospital emergency room which would be open at all times.

Use, accessory: A use located on the same lot with a principal use or building such as a garage, storage building, swimming pool, children's play area, etc.

Use, principal: The main purpose for which a zoning is intended and for which it may used.

V

Variance: A relaxation of the terms of this ordinance that will not be contrary to the public interest where, owing to conditions peculiar to the property and not the result of the applicant, a literal enforcement of this ordinance would result in unnecessary and undue hardship. A variance cannot be granted to change the text of this ordinance, to reclassify property on the zoning map or to allow a use not permissible within the district involved.

Veterinary services or clinic: An establishment for the care and medical treatment of animals.

VPD: Vehicles per day.

W

Warehouse: A use engaged in storage, wholesale, and distribution of manufactured products, supplies and equipment, excluding bulk storage of materials that are inflammable or explosive or that present hazards or conditions commonly recognized as offensive.

Watchman's or caretakers single family dwelling: A temporary accessory structure containing living quarters and kitchen facilities for housing persons responsible for overseeing and maintaining security for the main use on the site.

Water and wastewater system: City of Griffin Water and Sanitary Sewer System.

Wholesale business: A business primarily engaged in the selling of goods or articles in gross to retailers for resale and not directly to the consumer.

Writing: The term "writing" includes printing and all numerals, and also pictures, illustrations and printed or written designs.

Y

Yard, front: The minimum permitted space between the front building line and the front property line.

Yard, rear: The minimum permitted space between the rear building line and the rear property line.

Yard, side: The minimum permitted space between the side building line and the side property line.

Yard: An open space that lies between the building and the nearest property line. The minimum required yard on a zoning lot as set forth in this chapter that is left unoccupied with structures, parking and facilities. A yard may also be known as a setback.

Year: The term "year" means a calendar year.

Z

***Zoning administrator**:* The person who has been designated by the city manager to administer the enforcement of this ordinance.

***Zoning decision**:* Final legislative action by the board of commissioners which results with:

a. The adoption of a zoning ordinance;
b. The adoption of an amendment to this ordinance which changes the text of this ordinance;
c. The adoption of an amendment to this ordinance which rezones property from one zoning classification to another;
d. The adoption of an amendment to this ordinance which zones property to be annexed into the city; or
e. The grant of a permit relating to a special use of property.

***Zoning district**:* A section of the City of Griffin, Georgia, as designated on the official zoning map within which zoning regulations are uniform and compatible.

***Zoning map**:* The official map of the City of Griffin, Georgia, entitled "Zoning Map of the City of Griffin," indicating the location of zoning districts in the city.

***Zoning ordinance**:* An ordinance establishing procedures and zones or districts within the respective territorial boundaries of the City of Griffin, Georgia, which regulate the uses and development standards of property within such zones or districts. The term also includes the map adopted in conjunction with the textual ordinance which shows the zones or districts classifying property depicted thereon.

***Zoning**:* The power of local governments to provide within their respective boundaries for the zoning or districting of property for various uses and the prohibition of other or different uses within such zones or districts and for the regulation of development and the improvement of real estate within such zones or districts in accordance with the uses of property for which such zones or districts were established.

Article 3. ESTABLISHMENT, FUNCTIONS, AND ADMINISTRATION

301. INTRODUCTION

This article establishes and defines the functions of the board of commissioners, zoning administrator and the planning and zoning board for purposes of this ordinance, amendments, appeals, variances and special uses.

302. ZONING ADMINISTRATOR

The position of zoning administrator is designated by the city manager.

302 A. Functions.

The functions of the zoning administrator shall be as follows:

1. Having the primary responsibility for administering and enforcing this ordinance;
2. Keeps up to date on current laws, recent court decisions and new techniques related to planning, zoning and development;
3. Serves as secretary to the planning and zoning board, coordinating review of amendments to this ordinance and special use applications;
4. Provides information to the city manager, board of commissioners and the public on zoning and related matters;
5. Makes recommendations to the planning and zoning board and to the board of commissioners on amendments to this ordinance, variances, special uses, annexations and development requests;
6. Maintains the official zoning map in a current manner, including all amendments to the map, at the planning and development department;
7. Maintains an official copy of the City of Griffin Zoning Ordinance at the planning and development department for public access;
8. Keeps up-to-date copies of the City of Griffin Zoning Ordinance available for sale to the public and a zoning map for review and access by the public;
9. Processes applications for rezonings, annexations, variances and special use permits;
10. Conveys written decisions on all requests or amendments to the zoning ordinance to the person or persons requesting such amendment within three days of decisions made by the board of commissioners.
11. Reviews applications for building permits for compliance with the City of Griffin Zoning Ordinance and denies such permits if they do not meet existing regulations;
12. Serves as liaison with developers and the City of Griffin Development Review Committee by accepting and processing applications for all commercial development and reviewing site plans for zoning compliance;
13. Inspects commercial projects to ensure zoning compliance;
14. Accepts and processes bonds for all commercial developments;
15. Maintains permanent records of amendments to the City of Griffin Zoning Ordinance and Zoning Map;
16. Other functions as prescribed by the city manager.

303. PLANNING AND ZONING BOARD

The planning and zoning board of the City of Griffin is hereby established as follows:

303 A. Members.

The planning and zoning board (PZB) shall be composed of seven members appointed by the board of board of commissioners. Each board of commissioners shall appoint one person who resides within their respective electoral district. The at-large commissioner shall appoint one person who resides within the limits of the City of Griffin. Vacancies shall be filled by appointment of the respective board of commissioners for

the unexpired term and district of the member affected. There shall be no compensation for members of the planning and zoning board, but they may receive reimbursement of reasonable and necessary expenses incurred in the performance of their duties with prior approval of such expenses by the city manager.

303 B. Qualifications of members.

No member of the planning and zoning board shall serve as a board of commissioners, Spalding County commissioner or hold any office or employment with the City of Griffin or Spalding County. Members shall be of good character and at least 18 years of age.

303 C. Terms.

Each member of the planning and zoning board shall be appointed for a term of three years. Appointments shall be made in January of each calendar year with the members assuming office immediately.

303 D. Officers.

At the first meeting of the planning and zoning board each calendar year, the members will elect a chairperson and vice-chairperson. The zoning administrator shall serve as the secretary. The chairperson will conduct meetings of the planning and zoning board. The vice-chairman shall serve in the absence of the chairperson. The chairperson and vice-chairperson shall vote on all matters brought before the planning and zoning board.

303 E. Meetings.

The planning and zoning board shall hold regular meetings on the third Monday of each month beginning at 6:00 p.m. in the city courtroom. All meetings of the planning and zoning board shall be open to the public. The chairperson or any three members may call a special meeting.

303 F. Quorum.

Three present and voting members of the planning and zoning board shall constitute a quorum. A failure of the planning and zoning board to have a quorum present and voting or a voting decision resulting in a tie shall constitute the staff recommendation being forwarded to the board of commissioners for review and consideration.

303 G. Conflicts of interest.

If any member of the planning and zoning board shall find that his private or personal interests are involved in the matter coming before the board, he shall disqualify himself from all participation in that case. No member of the board shall appear before the planning and zoning board of the board of commissioners as agent or attorney.

303 H. Functions.

1. Review the zoning ordinance to make recommends to the board of commissioners for amendments where appropriate. Recommend goals and objectives to the board of commissioners for the implementation and enforcement of the zoning ordinance.
2. Conduct meetings to review proposed amendments to this ordinance in order to make recommendations to the board of commissioners on rezoning applications, annexation applications and special use permits after receiving written comments on the application from the zoning administrator; provided, however, no action by the planning and zoning board shall constitute "final action" on zoning decisions.
3. Other functions as prescribed by the board of commissioners relative to zoning.

304. BOARD OF COMMISSIONERS

The functions of the board of commissioners, as relate to this ordinance, shall be as follows:

304 A. Public hearings – Amendments.

Conduct an official public hearing for amendments to this ordinance in accordance with subsections of section 404.

304 B. Proposed amendments.

Approve or deny any proposed amendment to this ordinance, including any and all amendments to the official zoning map (the rezoning of land), based upon an evaluation under the standards found within section 404 of this ordinance, and after first receiving written comments and recommendations from the zoning administrator and the planning and zoning board.

304 C. Public hearings – Appeals.

Hold public hearings and make decisions on appeals of decisions made by the zoning administrator; applications for variances and applications for special uses.

304 D. Publish decisions.

Officially publish any decision made relative to approval or denial of any amendment to this ordinance, appeals, variances and special use permits.

304 E. Propose amendments.

Propose amendments to this ordinance, as deemed appropriate, and submit such proposed amendments to the zoning administrator and planning and zoning board for their written comments and recommendations.

304 F. Appoint members.

Appoint the planning and zoning board in accordance with section 303.B.

305. CONFLICT OF INTEREST DISCLOSURE AFFIDAVIT

Members of the planning and zoning board and the board of commissioners shall make and file an affidavit with the zoning administrator in any zoning matter in which the official has a property interest in any real property affected by the rezoning action upon which that official is authorized to vote; has a financial interest in any business entity which has a property interest in any real property affected by the rezoning action upon which that official is authorized to vote; or has a member of the family having an interest described above. For purposes of this requirement, members of the family shall include the official's spouse, father, mother, brother, sister, son or daughter. Affidavits shall be filed immediately upon learning that a rezoning action is pending. Officials making disclosure under this requirement shall exercise discretion in whether to participate in consideration of the rezoning action.

Applicants applying for a rezoning action, within ten days of filing of the application, shall file with the zoning administrator an affidavit disclosing whether within two years immediately preceding the filing of said application, applicant has made campaign contributions or gifts totaling or having an aggregate value of $250.00 or more to a member of the planning and zoning board or board of board of commissioners who is authorized to vote on the rezoning action. This disclosure shall state the name of the official, the amount and date of the campaign contribution or a description and estimate of value of any gift.

Article 4. PROCEDURES

401. SUBMITTAL REQUIREMENTS FOR ALL BUILDING, DEVELOPMENT AND ZONING APPLICANTS

All applications for reviews, approvals, annexations, administrative and legislative decisions specified in the Unified Development Code shall be submitted on forms provided by the city and shall be submitted with the documentation required for each type of application. The director of Planning and Development Services is hereby authorized to establish administrative deadlines for the receipt of applications and associated information in accordance with the provisions of this chapter.

401 A. No application officially accepted until complete.

1. Review of application completeness. Upon submittal, each application shall be subjected to a review of application completeness prior to being officially accepted by the city. An application shall be considered "complete" if it is submitted on the required form, includes all submittal information, including all exhibits specified by the director, and accompanied by the application processing fee as adopted by the board of commissioners and as may be revised periodically. The review of application completeness shall be conducted by staff within five business days of the submittal deadline. If the city determines the application is complete, the application shall be processed pursuant to this chapter.
2. Incomplete applications. If the city determines that the application is incomplete, staff shall notify the applicant of that fact via the contact phone information provided and specify the ways in which the application is deficient. All incomplete applications shall receive no further processing until the deficiencies are corrected via a new submittal.
3. Resubmittal of applications. Resubmittal of the application shall be treated as a new application. Under no circumstances may staff delay conducting the review of application completeness in excess of five business days of the submittal deadline. If the review of application completeness is not completed within five business days of the submittal deadline, the application shall be determined complete.

401 B. Submittal fees.

All applications shall be submitted with the required fee. The amount of each fee will be established by the city, and approved by the board of commissioners, which may be revised periodically.

401 C. Boundary survey.

All applications shall be accompanied by a boundary survey prepared by a registered land surveyor; the number of copies shall be submitted as indicated on application forms established by the city; applications shall also include one copy of the boundary survey reduced to a size of 8.5 inches by 11 inches.

401 D. Legal Description.

All applications shall be accompanied by a written metes and bounds legal description. It must establish a point of beginning and from the point of beginning give each dimension bounding the property, calling the directions (e.g. north, northeasterly, southerly, etc.) which the boundary follows around the property returning to the point of beginning. If there are multiple properties, all properties shall be combined into one legal description.

402. PLAN REVIEW

Prior to plat approval and prior to the issuance of any building, land disturbance, grading, construction or other development permit, applicants must submit site plans for city review. It is the policy of the City of Griffin to consider the approval site plans and subdivision plans as necessary for the orderly, efficient and economic growth and development of the city.

402 A. Building plan review.

In addition to building plan review requirements, no building permit shall be released prior to a review for zoning compliance. Further no Certificate of Occupancy shall be released prior to field inspection for site and zoning compliance with items including but not limited to: setbacks, parking, plantings, building height and other form, building materials, block sizes, and conditions to zoning as may have been required at rezoning approval. Section 1311 establishes procedures for Certificate of Use and Occupancy.

402 B. Development plan and subdivision.

Article 13 establishes review procedures for the land development process. Procedures involve Preliminary site plans (conceptual), Minor site plans, and Final site and Subdivision plans (construction) and As-Builts. Sections 1304 and 1305 define platting and conveyance procedures.

402 C. As-Builts.

Procedures established as follows: for all construction and grading (Section 1310), and for Roads, Site and Drainage (Section 1401).

403. SUBDIVISION AND THE CREATION OF NEW LOTS (COMBINATION AND/OR DIVISION)

Prior to plat approval and prior to the issuance of any building, land disturbance, or other development the subdivision or creation of new lots shall be reviewed for conformity with all zoning and development regulations, according to procedures established in Article 13.

404. AMENDMENTS

Amendments to this ordinance may be proposed by the zoning administrator, the board of commissioners, the planning and zoning board and any other owner of property within the City of Griffin or the owner's legal representative. All amendments to this ordinance, either to the text or map, shall be in accordance with the provisions of this section.

404 A. Written ordinance requirement.

All amendments to this ordinance, either to the text or map (rezonings) shall be in the form of a written ordinance and read at one meeting of the board of commissioners. Copies of the proposed ordinance, in final form, shall be available for distribution at the public hearing before the board of commissioners.

404 B. Consistency with Comprehensive Plan.

All amendments to this ordinance shall be consistent with the most current, adopted future land use section of the City of Griffin Comprehensive Plan, as may be amended from time to time, unless significant justification exists based upon an analysis of the standards set forth in section 405. The applicant shall bear the burden of proof and persuasion by demonstrating approval of a proposed amendment not consistent with the comprehensive plan is warranted, based upon evaluation of the standards set forth in section 405.

404 C. Applications.

All applications for annexation, rezoning, variance and special use shall be made in writing on form(s) provided by the City of Griffin and shall be submitted to the zoning administrator. No application shall be considered complete until all applicable form(s) have been submitted with payment of applicable fees.

404 D. Application submittal requirements.

All application submittals shall include information deemed necessary by the City of Griffin, including but not limited to the following:

1. Completed application form.
2. Detailed description of existing land uses on all contiguous property;
3. The location of the subject property including street numbers, if available;
4. A boundary plat of the subject property, prepared in accordance with the Georgia Plat Act, showing the dimensions of acreage, location of tract and location of all existing improvements and easements;
5. A site plan drawn to scale showing:
   a. Any and all improvements to be constructed if the application is approved, along with the proposed use and dimensions of all structures;
   b. A statement with any prior conditions to zoning, plat and/or prior variance request approvals granted by the City of Griffin;
   c. Site plans with variance requests shall indicate the dimension of the proposed subject of the variance request (see 415 for variance procedures).
6. Spalding County Tax Map, block and lot number of the appropriate plat reference;
7. The present and proposed zoning district classification for the subject property;
8. The name and address of the owner of the subject property;
9. The area of land of the subject property, stated in square feet if less than one acre;
10. Date of application;
11. Any prior applications or actions for rezoning of all or part of the subject property within the past five years;
12. Documentation supporting the request based upon the standards of this article.

404 E. Within a reasonable time following receipt of a complete application, the zoning administrator shall notify the planning and zoning board of the application submittal and the scheduled review process; a copy of this notice shall be mailed to the applicant.

404 F. The planning and zoning board, upon receipt of the evaluation from the zoning administrator, shall submit its recommendation to the board of commissioners within 45 days of receipt of the application from the zoning administrator.

404 G. Public Hearings.

Public hearing shall be conducted as provided in section 408.

404 H. Deferral authority.

The board of commissioners, zoning administrator and planning and zoning board may defer action or recommendation for a reasonable length of time on any proposed zoning decision pending submission of additional information as requested of the applicant in writing.

404 I. Decisions and recording.

Upon concluding the public hearing, the board of commissioners, in its legislative discretion, may approve, approve with conditions or deny the proposed zoning decision, as submitted or conditioned, defer a decision until a specific meeting date, require the applicant to file additional information or plans regarding the project development and defer action to a later meeting date or allow withdrawal by the applicant, if requested prior to a vote by the commission.

1. Voluntary withdrawal prior to a vote shall not constitute a denial.
2. In approving the ordinance, the commission may impose additional conditions or delete conditions recommended by the zoning administrator or planning and zoning board;

provided, however, all such conditions shall be stated in the proposed ordinance prior to its second reading.

3. The second and final reading of the ordinance shall take place at the next regular scheduled meeting of the board of commissioners. The vote of each member of the commission shall be recorded in the official minutes. Any tie vote shall constitute a denial of the proposed ordinance amendment.

404 J. After final action by the board of commissioners on a zoning decision, any necessary changes to the official and unofficial zoning maps shall be made by the zoning administrator within ten days and shall be dated and signed by the chairman. The zoning administrator shall maintain an official log of all authorized changes, either in the text of this ordinance or to the official zoning map, indicating the date the change was made and, if different, the effective date of the zoning decision. Only changes authorized to be made by the zoning administrator, after compliance with the amendment procedures of this ordinance, shall be made and recorded on the official zoning map and official copy of this ordinance, as maintained for public inspection and copying in the zoning administrator's office.

404 K. The zoning administrator shall convey the final action, in writing, on a zoning decision to the applicant within three business days of the board of commissioners making such decision.

404 L. All records concerning proposed zoning decisions, whether approved, denied or withdrawn, shall be maintained by the zoning administrator as public records of the city.

404 M. If an application for rezoning is denied by the board of commissioners, the same request shall not be reconsidered for six months from the date of such denial. Voluntary withdrawal by the applicant, prior to a vote on final action by the commission, shall not constitute a denial.

405. REZONING EVALUATION CRITERIA

All proposed rezonings of property shall be evaluated in light of the following standards used to interpret the balance between an individual's right to the use of their property and the public health, safety or general welfare of the community. In applying these standards, expression of opinions unsupported by objective factual analysis, using the criteria set forth below, should not be considered by the board of commissioners.

405 A. Existing uses and zoning of adjacent property;

405 B. Whether the property to be affected by the zoning proposal has a reasonable economic use as currently zoned, although such use may not be its highest and best potential use.

405 C. Whether the zoning proposal will permit a use that is suitable in view of the use and development of adjacent and nearby property;

405 D. The relative gain to the public as compared to the hardship imposed upon the individual property owner (applicant) by maintaining the existing zoning;

405 E. The suitability of the subject property for the purposes for which the applicant seeks to have it rezoned, including availability of existing infrastructure (when required infrastructure is not available, applicant should address the means by which it will be provided);

405 F. The compatibility of the applicant's proposed use of the property, if rezoned, with surrounding properties and uses (the applicant should address measures to reduce negative impacts of the proposed use, including applicant's position on any conditions

attached to a recommendation for rezoning by the zoning administrator and/or planning and zoning board);

405 G. Any environmental, historic, cultural or aesthetic concerns unique to the subject property or proposed use, and how applicant proposes to mitigate any negative impacts on surrounding properties and the community at large;

405 H. Whether there has been a change in conditions of the subject property or properties in the vicinity of the subject which give supporting grounds for either approval or disapproval of the zoning proposal; and

405 I. If applicable, the length of time the subject property has been vacant or substandard as zoned, when considered in the context of land development in the vicinity of the property.

406. SPECIAL USES

Special uses are compatible uses or land or the improvement of structures within a zoning district that reasonably require special consideration and therefore are not allowed of right. All proposed special uses of property shall follow procedures for Sections 404 C, D, and E, and public hearing proceedings Section 408.

406 A. Special use requests shall be evaluated according to the following standards:

1. It must not be detrimental to the use or development of adjacent properties, or to the general neighborhood so as to adversely affect the health, safety or general welfare of citizens;
2. It must not adversely affect existing property and uses and it must be proposed to be placed on a lot of sufficient size to satisfy the space requirements for the use; 3
3. General compatibility of the proposed special use with adjacent properties and other land uses in the general area;
4. The proposed use will not constitute a nuisance or hazard or otherwise adversely affect the public interest because of the number of persons who may normally be expected to use such facility or type of physical activity;
5. Other items that may be considered include traffic flow, availability of off-street parking, protective screening, hours and manner of operation of the proposed use, outdoor lighting, signage and ingress and egress to the property;
6. The applicant must meet all specific requirements established in this ordinance for the particularized special use requested, including design treatments required by Articles 5 and 6.

406 B. Decisions.

In granting a special use permit, the board of commissioners may impose reasonable conditions as are deemed necessary in the particular case for the protection or benefit of existing properties in order to assimilate the proposed development or use into the neighborhood with minimal impact. The board's conclusion on the grant of a special use, or the reasons for denial, shall be afforded the applicant in writing, by certified U.S. mail to the address shown in the application. Aggrieved applicants shall have 30 days from receipt of notice in which to petition the Superior Court of Spalding County for writ of mandamus.

407. ANNEXATION

The zoning administrator and planning and zoning board shall make recommendations to the board of commissioners on the initial zoning of land proposed to be annexed in the City of Griffin, Georgia. Annexation applications, meeting the requirements of

O.C.G.A. Title 36, Chapter 36, shall be submitted to the zoning administrator and shall include the following information:

407 A. A legal description of said property to be annexed;

407 B. Title opinion of an attorney certifying to ownership of the property as of the date of filing this application;

407 C. A complete survey showing the property in relation to the present city boundary;

407 D. A copy of the pertinent Spalding County Tax Map or maps showing where the property to be annexed is located in reference to existing municipal boundaries;

407 E. Applicant's proposed initial zoning classification for the property under this ordinance;

407 F. Governmental services currently provided for the property to be annexed, either by Spalding County, other municipalities or authorities;

407 G. County-owned public facilities of the area proposed to be annexed;

Applicant's evaluation of initial zoning requested shall be conducted in accordance the criteria of section 405. A vote by the board of commissioners on zoning for an annexation proposal shall not constitute final action on a zoning decision until the annexation is finally approved and effective, including pre-clearance pursuant to section 5 of the Voting Rights Act of 1975, as amended. No land annexed into the City of Griffin, Georgia, shall be unzoned.

408. PUBLIC HEARINGS

408 A. Public hearings shall be held prior to legislative and certain administrative action, as specified within the Unified Development Code.

408 B. Public hearings shall be held by the board of commissioners prior to final legislative action which results with:

1. The consideration of an amendment to this ordinance that changes the text of the ordinance;
2. The consideration of any amendment to this ordinance that rezones property from one zoning classification to another;
3. The consideration of any amendment to this ordinance which zones property to be annexed into the City of Griffin;
4. The consideration of a permit relating to the special use of property as provided in this ordinance;
5. When a proposed zoning decision is sought to locate or relocate a half-way house, drug rehabilitation center or other facility for the treatment of drug dependency, an additional public hearing shall be conducted at least six months and not more than nine months before final action by the board; such hearing shall be supplemental to the public hearing required under subsection (A) above. For the supplemental hearing only, the published notice of the public hearing shall be at least six column inches in size and shall not be located in the classified advertising or legal advertising section of the newspaper and shall publish at least 15 and not more than 45 days prior to the hearing. In addition, a sign containing the information required by subsection (C) below shall be posted conspicuously on the property at least 15 days prior to the date of the hearing.

408 C. The zoning administrator shall cause notice of the public hearing before the board of commissioners to be published in the legal notice section of the Griffin Daily News at least 15, but not more than 45, days prior to the date of the hearing, stating the time, place and purpose of the hearing, the location of the property by street address and tax map reference, the present zoning classification and, as applicable:

1. For zoning and special use public hearings, the proposed zoning classification or description of other zoning decision sought.

2. For a zoning decision for initial zoning of property to be annexed into the city, in lieu of the present zoning classification, the publication shall state the present zoning or use of the property under the Spalding County Zoning Ordinance.
3. For a variance request, the publications shall state the section(s) of the code applicant requests permission to vary.

408 D. Notification signs.

If the action is for the rezoning of property shown on the official zoning map by a party other than the City of Griffin, initial zoning upon annexation of property or a special use permit, a minimum of one sign stating the time, place and purpose of the hearing, the location of the property by street address and tax map reference, the present zoning classification and the proposed zoning classification or description of other zoning decision sought, and the telephone number of the zoning administrator's office, shall be placed by the zoning administrator in a conspicuous location on the property not less than 15 days prior to the date of hearing. The sign may contain both the planning and zoning board and board of commission [commissioners] hearing dates. When the zoning decision is for initial zoning of property to be annexed into the city, in lieu of the present zoning classification, the publication shall state the present zoning or use of the property under the Spalding County Zoning Ordinance. Where feasible, the sign shall be placed at or near the property boundary adjacent to the public right-of-way in a manner most readily seen by the public.

408 E. Proceedings.

At the official public hearing conducted by the board of commissioners, the chairman will announce the proposed request under consideration and that printed copies of the adopted standards governing exercise of the zoning power and procedures governing the hearing are available to the public. The zoning administrator shall advise the commission of the nature of the decision sought and the recommendation of the planning and zoning board and city staff, when applicable. The applicant or his attorney may then address the commission. Proponents, including the applicant or his attorney, shall have no less than ten minutes for presentation of data, evidence and expert opinions; opponents of the proposed decision shall have an equal minimum period of time. The chairman may grant additional time; provided, however, an equal period of time shall be granted both sides. The chairman may limit repetitious comments in the interest of time and may call for a show of hands of those persons present in favor or opposed to the proposed decision. It shall be the duty of the chairman to maintain decorum and to assure the Public Hearing on a proposed decision is conducted in a fair and orderly manner. Zoning and variance request decisions shall be placed on the agenda in the order in which they are filed with the zoning administrator.

408 F. Copies of applicable sections of this ordinance shall be available for distribution to the public at all public hearings, without charge. Copies of the entire ordinance may be purchased at the planning and development department at a reasonable charge.

409. MEETINGS

409 A. All meetings, both regular and called, at which an application filed pursuant to this ordinance is to be discussed, considered or acted upon by the board of commissioners, shall be open to the public. Notice of special meetings shall be given in accordance with the Georgia Open Meetings Law.

409 B. Where notice is given in accordance with this ordinance, no further notice to the property owner or any interested party is required. Failure to provide notice as required by this ordinance may constitute grounds for the final action of an application to be

declared null and void. Appearance at the public hearing shall constitute a waiver of all claims based upon improper publication of notice or posting on the property.

410. VARIANCES

Variances from the specific requirements of this ordinance are not zoning decisions and therefore application is made directly to the board of commissioners. To request a variance, the applicant must provide competent evidence that a literal enforcement of the provisions of this ordinance will, in an individual case, result in practical difficulty or unnecessary hardship and that the variance sought is the least departure from its terms, so that the spirit of this ordinance shall be observed, public safety and welfare secured and substantial justice done.

410 A. Limits to variance considerations.

The board of commissioners shall not grant variances for the following:

1. To increase the maximum density per acre above that established by the physical requirements for the zone in which the property is located;
2. To permit a use or expansion of a legal non-conforming use in a district in which the use is not permitted by right or special use under this ordinance; or
3. Due to the presence of non-conformities in other existing buildings or structures in the zoning district or adjoining zoning districts.

410 B. Application submittal.

Applicant shall follow submittal requirements described in Section 404 C and D.

410 C. Public hearing required.

Prior to taking final action on any variance application, the board of commissioners shall conduct an administrative hearing, which shall follow public hearing notification and procedures as provided in Section 404, with the following qualifications:

1. The burden of proof and persuasion shall be upon the applicant to demonstrate entitlement to the variance, under the standards set forth below, by clear and convincing evidence. After first hearing from the applicant or his attorney, the city staff and/or any interested parties desiring to participate in the hearing shall be entitled to present evidence. The applicant shall have the right of rebuttal.
2. Interested parties shall be advised that administrative hearings differ from legislative hearings at which public sentiments may be considered. Expression of public opinion unsupported by objective facts shall not be given consideration by the board of commissioners in acting upon the variance request. It shall be the duty of the chairman to place all witnesses under oath prior to allowing such witness to testify. All hearings shall be recorded and a transcript of the evidence and proceedings at the hearing shall be prepared by the city, upon request of any party, who shall be responsible for the cost of transcription.

410 D. Variance evaluation criteria.

The board of commissioners, upon conclusion of the administrative hearing, shall deliberate upon the evidence, evaluated in light of the following five standards:

1. There are extraordinary and exceptional conditions pertaining to the particular piece of property in question because of its size, shape or topography;
2. The application of these regulations to this particular piece of property would create a practical difficulty or unnecessary hardship;
3. Such conditions are peculiar to the particular piece of property involved;
4. Relief, if granted, would not cause substantial detriment to the public good or impair the purposes and intent of these regulations, provided, however, that no variance may be granted for a use of land or building or structure that is prohibited by this ordinance; and
5. A literal interpretation of this ordinance would deprive the applicant of any rights that others in the same district are allowed.

410 E. Variance decisions and appeals.

1. **Approvals.**
   On all variance applications, after hearing, the board shall make findings of fact and conclude the applicant's entitlement to a variance. In granting a variance, the board of commissioners may attach such conditions regarding the location, character and other features of the proposed building, structure or use as it may deem advisable so that the purpose of this ordinance will be served. The terms of the approved variance shall be fully set forth in a writing signed by the chairman and made a part of the official record, with a copy mailed to the applicant and any interested party.
2. **Validity period.**
   A variance is valid for the period of one year from the date of approval. Prior to the end of the year, if work has not begun, the applicant may request one extension not to exceed one additional year.
3. **Denials.**
   If the variance is denied, the findings of the board upon which the denial is based shall be served upon the applicant, by certified U.S. mail at the address shown in the application.
4. **Appeals.**
   Aggrieved applicants shall have 30 days from receipt of a notice of denial in which to petition the Superior Court of Spalding County for writ of certiorari. Notice of the date, time and location of the administrative hearing shall be given the applicant and any interested party known to the zoning administrator, not less than 15 days prior thereto, by certified U.S. mail to the address shown in the application or as furnished to the zoning administrator. In addition thereto, notice of the administrative hearing shall be published in the Griffin Daily News in the legal notice section not less than 15 days prior to the hearing, advising all interested parties of their opportunity to appear and participate. A telephone number for the zoning administrator shall also appear in the notice to allow interested parties to obtain more information.

411. REVOCATION OF APPROVAL

In the case of any variance or special use permit granted in accordance with the provisions of this ordinance, if the board of commissioners learns that such variance or special use permit was granted based upon false or misleading representations made by the applicant or his agents to the commission, the board of commissioners may revoke such special use or variance after giving due notice to all parties concerned and granting full opportunity for hearing. Following revocation, an application for a variance or special use permit shall not be resubmitted for a period of six months.

412. RECORDS AND MINUTES OF PROCEEDINGS

The secretary to the board of commissioners shall cause the proceedings of all zoning public hearings to be recorded in the official minutes. A copy of the minutes of the public hearing and all evidence submitted at the public hearing shall also be made a part of the particular zoning decision's file in the office of the zoning administrator. Copies of applications, proposed ordinances, supporting documents and plats, written evaluations and recommendations by the zoning administrator and the planning and zoning board and minutes of all related proceedings shall be deemed as the official record.

413. DEVELOPMENTS OF REGIONAL IMPACT

Any development or proposed project which is a development of regional impact (DRI), as defined by regulations of the Georgia Department of Community Affairs, must

first be submitted to the governing Regional Commission for review in accordance with the applicable state regulations and statutes before any zoning decision can be made by the city with respect to said project.

414. APPEAL OF DECISIONS

414 A. Decisions by Board of Commissioners.

Any person aggrieved by a decision of the board of commissioners may, within 30 days of such decision becoming final, petition the Superior Court of Spalding County, Georgia, for appropriate relief. A decision in regard to the denial of a rezoning, variance or special use shall be deemed to have been rendered on the date of receipt of a letter from the zoning administrator notifying the applicant of the board of commissioners action.

414 B. Decisions by directors.

A written decision of the planning and development services director, director of public works and utilities, concerning interpretation or applicability of any provision of this ordinance shall be final. If any of the aforementioned directors disapproves any plan submitted pursuant to all processing requirements identified in this ordinance, and the applicant of such plan contends that such disapproval was not properly based on applicable state and/or local ordinances and policies, he may petition the superior court of Spalding County for a review on writ of certiorari. Such action must be filed with the superior court within 30 days of the written decision of the director.

Article 5. USE PROVISIONS: PERMITTED, SPECIAL, ACCESSORY AND NONCONFORMING

501. GENERAL

501 A. Every use must be upon a lot.

No building or structure may be erected or use established unless upon a lot as defined by this ordinance.

501 B. Only one principal building per lot.

Except as herein after provided, there shall be no more than one principal building or structure upon any lot in a single-family residential district.

501 C. Utilities.

Electric substations, natural gas facilities, cable or other communication facilities are permitted within all zoning districts.

501 D. Emergency shelters.

Emergency shelters for the purpose of protecting individuals from life threatening weather storms or other emergencies shall be permitted as an accessory structure in all zoning districts and shall meet the setback requirements of such structures in the district. Shelters shall be maintained so as not to become a hazard or blight to the community.

502. PERMITTED AND PROHIBITED USES

502 A. Permitted land use.

The Unified Development Code establishes uses based upon zoning district, as well as certain criteria related to design, infrastructure and other location criteria. See Article 7 for the establishment of zoning districts and associated uses permitted within districts, as identified by Table 703.

The determination whether a proposed use is proper in a given zoning district shall be made by the director of development services. Interpretations concerning the meaning of this Code may be important in a particular case. Persons should not expend money on project development until the director has determined in writing that the proposed use meets city regulations and policies regarding permitted and prohibited uses and criteria for special uses.

502 B. Uses prohibited.

1. If either a use or class of use is not specifically indicated as being permitted in a zoning district, either as a matter of right or as a special use, then, such use, class of use, or structures for such uses, shall be prohibited in such district.

Uses that are not specifically indicated but clearly resemble other permitted uses may be considered by Director upon written request for review. Determination of whether such use clearly resembles other permitted uses shall be made based on (1) uses that share the same subcategory classification code in the North American Industry Classification System (NAICS) or other standardized coding for businesses and (2) whether the proposed use generates equal or less traffic or nuisance than similar uses which are indicated as permitted.

503. SUPPLEMENTAL REGULATIONS FOR SPECIAL USES

503 B. Home occupations.

A home occupation is a use conducted within residential premises by a person or family residing therein, which customarily is considered an occupation for gain or profit. A home occupation shall be governed by the following requirements:

1. Only residents of the dwelling shall be engaged in the home occupation;
2. The home occupation shall be clearly incidental to the residential use of the dwelling and shall not change the essential residential character of the building;
3. No display of products shall be visible from the street;
4. Only one point of business identification sign, not exceeding two square feet in size, non-lighted and attached to the principal building shall be permitted;
5. No external alterations inconsistent with the residential use of the building shall be permitted. If internal alterations are required they shall be permitted and meet all applicable building codes;
6. The occupation shall not constitute a nuisance in the neighborhood;
7. No accessory structures or outside storage may be shall be used in connection with the occupation;
8. Vehicles used primarily as passenger vehicles only shall be permitted in connection with the conduct of the home occupation;
9. There shall be off-street parking provided (off the right of way) on the driveway or rear of the residence for a maximum of two customers.
10. No commercial grade equipment such as landscaping equipment or materials or machinery or materials associated with construction, grading or hauling shall be allowed to be stored or parked on the property;
11. The following, including but not limited to, are uses that shall be considered home occupations: addressing service, artist or art instructor, bed and breakfast, provided all parking is located in the rear of the dwelling; beauty shop (with no more than one operator), dentist, attorney, doctor, drafting, dressmaking, insurance agent, music teacher, notary public, photographer, real estate agent, tax consultant, bed and breakfast home, private consultant, or any other home office consisting of a personal computer, fax machine, phone or any other accessory office equipment used to establish a home office, day care for no more than six children; licensed family day care home, provided such home is located in a single-family residential district;
12. All home occupations must have an occupational tax certificate.

503 C. Kennels.

Because of the potential impact of noise and nuisance upon surrounding and adjacent properties, the following criteria apply for commercial dog kennels:

1. A minimum lot size of three acres for kennels with no more than 10 dogs at any one time
2. A minimum lot size of five acres for kennels with 11 or more dogs at any one time. If a property is smaller than the minimum acreage, the conditional use cannot be approved. The criteria also contain minimum setback requirements from lot lines for structures and outdoor pens and runs.

503 D. Day care standards.

1. Family day care home standards.

This Family Day Care Home Standards section applies to all districts. Each family day care home shall be subject to the following requirements, when located within a residential zoning district or residential dwelling:

a. All regulated facilities shall comply with the State regulation and acquire applicable State licenses for operation.
b. All facilities shall comply with the adopted Building Code for the State of Georgia.

c. Each family day care home shall provide not less than thirty-five (35) square feet of indoor play area for each child, based on maximum permissible enrollment.

d. Each family day care home shall provide not less than one hundred (100) square feet of outdoor play area for each child, based on maximum permissible enrollment.

e. All required outdoor play/recreation areas shall be enclosed by a fence or wall not less than four (4) feet in height.

f. The exterior appearance of any residential structure for which a family day care home is approved, shall be maintained as a residential structure and no signs other than a sign, attached to the primary structure, not exceeding two square feet, as authorized within Article 8, Sign Standards (SS), shall be erected, and no cut-outs, animals characters, or other graphics shall be affixed to the exterior of the structure or displayed upon the premises.

g. No family day care home shall be located within one thousand five hundred (1,500) feet of another day care facility.

h. All facilities must register with the Department of Community Development and provide a copy of all State licenses and documentation.

i. All facilities must apply for and receive a City of Griffin Business License.

2. Group day care home standards.

This Group Day Care Home Standards section applies to all districts. Each group day care home shall be subject to the following requirements, when located within a residential zoning district or residential dwelling:

a. All regulated facilities shall comply with the State regulation and acquire applicable State licenses for operation.

b. All facilities shall comply with the adopted Building Code for the State of Georgia.

c. Each child day care facility shall provide not less than thirty-five (35) square feet of indoor play area for each child, based on maximum permissible enrollment.

d. Each child day care facility shall provide not less than one hundred (100) square feet of outdoor play area for each child, based on maximum permissible enrollment.

e. All required outdoor play/recreation areas shall be enclosed by a fence or wall not less than four (4) feet in height.

f. The exterior appearance of any residential structure for which a family day care facility is approved, shall be maintained as a residential structure and no signs other than a sign, attached to the primary structure, not exceeding two square feet, as authorized within Article 8, Sign Standards (SS), shall be erected, and no cut-outs, animals characters, or other graphics shall be affixed to the exterior of the structure or displayed upon the premises.

g. No day care facility shall be located within one thousand five hundred (1,500) feet of another day care facility.

h. All facilities must register with the Department of Community Development and provide a copy of all State licenses and documentation.

i. All facilities must apply for and receive a City of Griffin Business License.

3. Day care home standards.

These Day Care Center Standards section applies to all districts. Each day care center shall be subject to the following requirements when located within a commercial building or commercial zoning district:

a. All regulated facilities shall comply with the State regulation and acquire applicable State licenses for operation.

b. Each child day care facility shall provide not less than thirty-five (35) square feet of indoor play area for each child, based on maximum permissible enrollment.

c. Each child day care facility shall provide not less than two hundred (100) square feet of outdoor play area for each child, based on maximum permissible enrollment.

503 E. Personal care, boarding and group home.

This Personal Care Home, Boarding Home, and Group Home Standards section applies to all districts. Each personal care home, boarding home, and group home having six (6) or more persons shall be subject to the following requirements:

1. All regulated facilities shall comply with the State regulation and acquire applicable State licenses for operation.
2. All facilities must register with the Department of Community Development and provide a copy of all State licenses and documentation.
3. The exterior appearance of any residential structure for which a personal care home, boarding home, or group home is approved, shall be maintained as a residential structure and no signs other than a sign, attached to the primary structure, not exceeding 2 square feet, as authorized within Article 8, Sign Standards (SS), shall be erected.
4. Meet all regulations as identified in the adopted building code and adopted fire code.
5. Meet all parking standards as identified within Section 6.32, Parking Standards (PK).
6. All facilities must apply for and receive a City of Griffin Business License.

503 F. Drive-through facilities (eating establishments or other).

Drive-through facilities and service windows shall be located to the side or rear yard of the establishment and drive aisles must be located so as to avoid conflict with pedestrian traffic. To promote pedestrian oriented environments, drive through aisles shall not run parallel to a street.

503 G. Gas station, car washes and automobile services.

Operations such as pumps, vacuum stations and finishing for such services shall be located to the rear of the structure on the site, or if properly screened, within the side yard. Supports for canopies shall be brick or other high quality material.

503 H. Cemeteries

The construction of all new cemeteries shall be subject to the following requirements:

1. The lot shall be a minimum of five (5) acres in area;
2. No crematorium or dwelling, other than a single-family dwelling for a caretaker, shall be permitted;
3. No building or gravesite shall be located within 100 feet of any adjacent property boundary;
4. The lot shall have direct access to an arterial or major collector road.

504. ACCESSORY USES AND STRUCTURES; TEMPORARY USES

504 A. Accessory uses (swimming pools, outdoor play structures or play sets), structures, (garages, storage buildings, etc.) or structures on residential lots when located within a front or side yard, shall be located no closer to property lines than would be allowed for a principal dwelling.

504 B. Within a rear yard, an accessory building on a residential lot shall be located at least five feet from all property lines, except in the case of corner lots, accessory buildings shall be set back from the property line a distance equal to the front yard setback established for the zoning district on both streets. All accessory structures 200 square feet or more shall be constructed of the same building material as the principal dwelling.

504 C. Accessory structures on non-residential lots shall not be permitted in the front yard and must comply with the side and rear-yard setback requirements established for the zoning district in which such accessory buildings or uses are located. Accessory structures on non-residential lots shall be finished using materials comparable to the principal structure.

504 D. Accessory structures in all zoning districts shall be subordinate to the principal structure. An accessory structure's floor area shall be no larger than 50 percent of the principal residential dwelling floor area or 25 percent of a commercial structure(s) floor area.

504 E. Permitted accessory uses and structures include the following:

1. Private garage;
2. Storage structure for equipment and supplies in maintaining the principal dwelling and grounds;
3. Private swimming pool, which shall be enclosed by a fence a minimum height of four feet;
4. Decks, patios, gazebos, grills or similar facilities;
5. Private tennis court, basketball court, volleyball court or similar outdoor sport facility, provided that lights are not used which would in any way be a nuisance to neighbors or the community;
6. Non-commercial garden, greenhouse, cold frame or similar structure;
7. Private boat docks and boat houses on lots adjoining a water body to which the residents of the development have legal right access;
8. Pump and well houses for on-site irrigation, with the exception of MDR, HDR-A, HDR-B and PRD zoning districts for which they are prohibited.
9. Ground-based satellite dish antennas shall be placed in a side or rear yard only and shall be a minimum of five feet from all property lines.

504 F. These regulations are designed to allow short-term and seasonal commercial uses and activities that are temporary in nature, will not adversely impact the surrounding areas and land uses and that can be terminated and/or removed immediately. Non-commercial uses and activities are not intended to be regulated hereafter.

1. Temporary commercial uses and activities are characterized by their short-term or seasonal nature and by the fact that permanent improvements are not made to the site. Temporary commercial activities include activities such as construction trailers, leasing offices, carnivals and fairs, parking lot sales and seasonal sales such as landscape materials and equipment, patio and lawn furniture, Christmas trees, pumpkin sales and produce stands.

   Temporary uses shall meet the following regulations:

   a. No temporary use structure shall be located within a public right-of-way;
   b. Adequate and safe ingress and egress to the site, such that the normal traffic pattern is not disrupted and parking for the intended activity shall be provided on site. Parking or stopping on the public right-of-way shall be prohibited; and
   c. No structure of a permanent nature shall be constructed.
2. Outdoor promotional and/or seasonal sales events at home improvement centers and other similar retail stores, whether freestanding or in shopping centers, provided that the sales area is located on the same lot as the store holding the sales event and selling their own merchandise and goods normally used in the outdoors, including but not limited to, lawnmowers, wheelbarrows, lawn furniture, plants, barbecue grills, play sets, manufactured outdoor storage buildings, etc., do not require a temporary use permit if the business holds a current occupational tax certificate registered with the City of Griffin.

Temporary use permits shall be issued in accordance with the following standards:

a. Real estate sales office located within a subdivision under current development, provided there are no cooking or sleeping accommodations, for a period not to exceed 12 months;

b. Contractor's office and equipment sheds in any district for a period not to exceed 12 months, provided that such office is placed on the property to which it is appurtenant, a final site plan has been approved and a land disturbance permit has been issued;

c. Seasonal produce and concession stands for a period not to exceed six months, provided the applicant submits written proof of permission from the property owner of the site including the proposed activity, date(s) activity is to operate and availability of adequate sanitary facilities, if necessary. The sale must be conducted within a commercial zoned district; the applicant must purchase or provide proof of an occupational tax certificate registered within the State of Georgia;

d. Carnivals, fairs, circuses, craft fairs, concerts, flea markets, car shows and sales, temporary sales of goods, and similar activities shall be allowed one event per quarter per location for a period not to exceed 14 consecutive days. The applicant must provide written proof of permission from the property owner. If applicable, inspections will be conducted by the building division and fire marshal;

e. Temporary activities, structures and other requirements deemed necessary as a result of a natural disaster or other public health and safety emergency do not require a temporary use permit and may be authorized by the city manager for the duration of the emergency;

f. Tents used in conjunction with temporary commercial uses shall be permitted in all zoning districts. Any tent erected under this section which has an area of 200 square feet or more, requires a temporary use permit and submission of a flame retardant or flame resistant certificate; and

g. Temporary uses associated with existing businesses registered in the City of Griffin and all businesses sanctioned by the State of Georgia to conduct business in the state are exempt from permitting and fees. The maximum number of temporary use events to a single fixed business location shall be four per year.

(Amended 9-11-12)

505. NONCONFORMING USES AND STRUCTURES

505 A. A legal non-conforming structure may not be enlarged or extended unless a special use permit is issued in accordance with section 406. A legal non-conforming structure may be maintained, repaired or structurally altered, under permit, in accordance with all pertinent building codes and ordinances. Failure to maintain a non-conforming structure in minimal compliance with applicable codes and ordinances, such that the general condition of the structure constitutes dilapidation or significant disrepair, shall create a rebuttable presumption of the owner or occupier's intent to abandon the

non-conforming structure. Revocation of a structure's certificate of occupancy for a period in excess of one year shall also evidence the owner or occupier's intent to abandon the non-conforming structure.

505 B. A legal non-conforming use, in active existence on the effective date of this ordinance, may be continued without interference until such time as the property owner or occupier intentionally relinquishes his right to maintain such use, as evidenced by an overt act, or failure to act, sufficient to support a finding of such intent. For purposes of this ordinance, discontinuance of the use for a period of one year or more shall create a rebuttable presumption of the owner or occupier's intent to abandon the non-conforming use. A legal, non-conforming use may not be enlarged or expanded to a less restrictive use (i.e. residential to commercial) unless a special use permit is issued in accordance with Article 4 of this ordinance.

505 C. Discontinuance of a legal non-conforming use or structure following its destruction by fire or other natural hazard shall not evidence intent to abandon if the owner applies for a permit to rebuild the structure or otherwise reactivate the use, within six months of the occurrence; provided, however, this period may be extended for an additional six months, but not to exceed a total of one year from the date of the occurrence, if the owner demonstrates substantial progress, time, effort and money in renovation of the structure.

505 D. It shall be the objective of the city that whenever feasible, legal non-conforming uses and structures be rendered conforming through the issuance of special use permits in accordance with section 406. Conditions imposed on such permits shall be designed to ameliorate the impact of the use or structure on adjacent or nearby properties and uses permitted by the zoning classification.

505 E. Where the zoning administrator determines a use or structure was rendered non-conforming by the adoption of this ordinance or any amendment thereto, he or she shall notify the property owner, in writing, that the use or structure constitutes a legal non-conforming use or legal non-conforming structure and inform the owner of the consequences of the abandonment of such use or structure under the provisions of this ordinance. An owner may appeal the determination of the zoning administrator to the board of board of commissioners.

505 F. Notwithstanding any other provision of this ordinance, any existing non-conforming use or structure which was illegal under any prior zoning ordinance shall continue to be an illegal non-conforming use or structure under this ordinance unless the use or structure is expressly permitted by this ordinance and meets all criteria for a permitted use or structure within its assigned zoning classification. Illegal non-conforming uses and structures are hereby declared to be a public nuisance, subject to abatement in accordance with chapter 22 of the Code of Griffin, Georgia.

Article 6. SITE DESIGN AND ARCHITECTURAL STANDARDS

601. YARDS AND STREETSCAPE

601 A. Permitted modification of front yard setback requirements

When a building is proposed on a lot and when on either or both lots which adjoin such lot at the street right-of-way there exists a principal building which does not conform to the setback requirements of this ordinance, the required setback for such building shall be as follows: (1) where only one said adjoining lot contains a principal building with a non-conforming setback, the setback shall be the computed average of the normal setback requirements with the non-conforming setback; or (2) where both adjoining lots contain a principal building each with a non-conforming setback, the minimum setback shall be the computed average of the two non-conforming setbacks.

601 B. Side and rear yards not required adjacent to railroad.

Within any non-residential district, side yards and rear yards shall not be required adjacent to railroad rights-of-way.

601 C. Lots with multiple frontage: side and front yards.

Front yard building setback requirements shall apply to all corner lots and yards having multiple road frontage. One of the other lot sides must conform to the minimum side yard setback and one lot side must conform to the minimum rear yard setback.

601 D. Permitted encroachments of yards and setbacks.

Architectural features such as cornices, eaves, steps, gutters, porches, decks and fire escapes may project not more than three feet beyond any required setback line, except where such projections would obstruct driveways used for access to service and/or emergency vehicles. For service stations, motels, restaurants, medical offices, churches and similar commercial uses, which serve the motoring public, canopies shall be allowed over a driveway or walkway within the front yard setback, not to exceed a point any closer than five feet from the right-of-way.

602. LOCATION OF LOADING DOCKS (REAR OR SIDE)

Loading docks and dumpsters shall not be visible from a public street and located within the rear yard or side yard with sufficient screening material to meet the intent of this code.

603. INTERPARCEL CONNECTIVITY REQUIREMENT

Nonresidential and mixed-use parcels shall provide interparcel connectivity with adjacent nonresidential and/or mixed-use parcels, unless topographic or other design constraints can be demonstrated.

604. BUFFERS, LANDSCAPING, AND OPEN SPACE

604 A. Screening required

Whenever a buffer or screening is required by this ordinance, sufficient opacity by a fence shall be provided in conjunction with vegetation to create a visual blind aesthetically compatible with the character of adjoining properties. A solid fence constructed of vinyl or wood; or a decorative wall shall be provided.

1. *The buffer requirements.*

a. Where institutional, commercial, or industrial land uses are contiguous with land zoned for single-family residential use, the minimum width of the required planted or undisturbed buffer shall be 30 feet.

b. Where institutional, commercial or industrial land uses are contiguous with land zoned for duplexes, or multifamily residences, the minimum width of the required planted or undisturbed buffer shall be 20 feet. The buffer shall consist of a stand of trees of such variety that an average height of at least six (6) feet can be expected by normal growth within no more than two years from the time of planting.

c. Plant materials in such planted buffers shall consist of 50 percent evergreen and established undisturbed natural buffers shall be retained.

604 B. Screening of dumpsters.

Dumpsters shall have three-sided 8-foot enclosure of brick, stucco or other material compatible with principle structure primary façade.

604 C. Screening of outdoor storage.

Where outdoor storage is allowed, screening shall be provided with decorative fencing and plantings.

604 D. Open space not to be encroached upon.

No open spaces shall be encroached upon or reduced in any manner except in conformity to the yard, setback, off-street parking spaces and such other regulations required by this ordinance for the district in which such building is located. Shrubbery, driveways, retaining walls, fences, curbs and planted buffer strips shall not be considered encroachments of yards.

604 E. Required open space may not be used by another building.

No part of any yard, other open space, off-street parking or loading space required or in connection with any building, structure or use by this ordinance shall be considered to be part of a required yard or other open space or off-street parking or loading space for any other building structure or use.

604 F. Encroachment into open space or on public rights-of-way.

1. No open space shall be encroached upon or reduced in any manner except in conformity to the yard, setback, off-street parking spaces and such other regulations required by this ordinance for the district in which such building is located. Shrubbery, driveways, retaining walls, fences, curbs and planted buffer strip shall be construed not to be encroachments of open spaces.

2. No privately owned building, service area, required off-street parking and/or loading facility other than driveways, access walkways and mailboxes shall be permitted within a public right-of-way. Signs and other structures belonging to the State of Georgia, City of Griffin, or Spalding County or for the purposes of railroad or private utility use are exempt from this provision.

605. BUILDING FORM, MASSING AND ARCHITECTURE

605 A. Manufactured and industrialized buildings.

This ordinance is not intended to discriminate against modular or industrialized buildings in favor of conventionally constructed structures. All structures erected or located within the City of Griffin shall be constructed, erected or installed on a permanent foundation and meet the physical requirements of the zoning district in which it is constructed including, but not limited to, setbacks, minimum square footage, etc.

1. Where a modular or industrialized building (residential, commercial or industrial) is to be installed, the unit must bear the insignia of the Georgia Department of Community Affairs (DCA) or the Southern Building Code Congress International (ICC). All such structures shall be affixed to the foundation in accordance with minimum standards of the certifying agency.

All manufactured housing shall be considered for ad valorem tax purposes as real property. All such modular and industrialized buildings shall meet the following standards:

a. The pitch of the roof shall have a minimum vertical rise of six feet for each 12 feet of horizontal run; and shall be finished with a type of shingle commonly used in conventional residential construction;

b. The exterior siding of the home shall consist of wood, hardboard, vinyl, brick, masonry or aluminum (vinyl covered or painted) comparable in composition, appearance and durability to the exterior siding commonly used in conventional residential construction;

c. A curtain wall, not pierced except for required ventilation and access and constructed of masonry, shall be installed so it encloses the area under the manufactured home to the ground level;

d. The tongue, axles, transporting lights and towing apparatus are removed after placement on the lot and before a certificate of occupancy is issued;

e. All modular homes shall be installed in accordance with O.C.G.A. 8-2-110--8-2-121, et seq., of the Official Code of Georgia Annotated.

605 B. Residential in-fill regulations.

Residential in-fill regulations are designed to encourage re-development and construction on scattered, undeveloped lots that are compatible with the existing neighborhood. This includes architectural style, siding materials, building setbacks of existing dwellings and the streetscape of the neighborhood.

1. For purposes of applying the residential in-fill regulations, "neighborhood" is defined as those developed, single-family residential properties situated within 400 feet of the proposed building lot, on both sides of the street on which the front elevation of the proposed dwelling will face. Measurements are to be taken in both directions from the nearest corner of such lot.

2. Notwithstanding other provisions of this Ordinance regulating lot size, lot width, yard setbacks or other development standards, residential in-fill development shall conform to the maximum extent practicable with existing residential development in the neighborhood. Such conformance shall include but not be limited to, adherence to existing architectural style, as much as practicable, building height and scale, roof pitch, siding materials, dwelling size and setbacks.

3. Whenever the provisions of this Section require construction on a lot that renders conformance to the side yard impractical, the requirements of this Section governing the size of the structure and compatibility of the structure shall control.

605 C. In-fill administrative variances: authority of the Zoning Administrator.

The authority of the Zoning Administrator to exercise administrative discretion in application of the zoning ordinance to encourage residential infill to foster construction on undeveloped, non-conforming lots shall be as follows:

1. Granting of a variance not to exceed one quarter (25%) of the requirement as established by this Ordinance from the following standards:

a. Front yard setback

b. Side yard setback

c. Rear yard setback

2. Granting of a variance not to exceed one-half of the requirements for front yard setback on both street frontages of a corner lot as established in this Ordinance.

In granting such variances under this subsection, the Zoning Administrator shall consider the following:

1. Relationship of the proposed dwelling to existing dwellings in the neighborhood

2. Relationship of the proposed front yard setback to the two adjoining single-family dwellings

3. Width of the lot upon which development is proposed

4. The actual building setback on the lot directly to the rear

5. The side-yard setback at the property line on the lot that is situated on the same frontage and having a side yard on the same street as the lot upon which development is proposed.
6. Granting of a variance involving structural addition to a non-conforming building, provided no further encroachment into the setback established by the building existing on the lot would occur.
7. Granting of a variance not to exceed 25% of the required number of parking spaces as established by Article 6 of this Ordinance subject to consideration of the parking demand characteristics, use and landscaping requirements of the proposed development.
8. Granting of such variances under this Section shall be subject to the Standards for Review contained in Section 410 D of this Ordinance.

605 D. New building and housing technologies.

1. Nothing in this ordinance shall be construed as to discriminate against emerging building and/or housing technologies. No minimum height requirements for buildings or houses shall be established.
2. All property owners shall be permitted to construct a building or dwelling on their property, subject to the provisions of this ordinance and related regulations. All buildings or dwellings shall be designed and built so that the front doors of all single-family dwelling units face a private or public street.

605 E. Violations and penalties.

Any person intentionally violating any of the provisions of this Ordinance shall be subject to citation before the Municipal Court, and upon conviction punished in the manner provided by The Code of Griffin, Georgia, Section 1-12. Each day's continuance of a violation shall be considered a separate offense.

The owner of any building, premises or parts thereof, where anything in violation of this Ordinance shall be constructed, places or shall exist and any builder, architect, contractor or agent of the owner who knowingly assists in the commission of such violation may be cited for separate offenses. Any person in possession or control of a building or structure in which a use in violation of this ordinance is found to exist or is being exercised may be cited for a separate offense.

605 F. General architectural design standards.

The intent of this section is to provide minimum aesthetic standards for exterior architectural design for all new construction.

1. *Residential*:
   - **a.** All single-family residential dwellings shall have a minimum roof pitch of 6 to 12.
   - **b.** All new single-family residential dwelling construction shall be sodded and stabilized on the front and side yards.
   - **c.** All new residential construction air conditioning units and HVAC systems shall be thoroughly screened from view from the public right of way and from adjacent properties by utilizing landscaping.
   - **d.** All new residential subdivisions are required to install underground utilities and implement decorative poles/street lights in accordance with city policies;
   - **e.** All exterior finish elevations that front along a public right of way of all new single-family residential dwellings shall be constructed of brick, stone, stucco or cement board; vinyl can be utilized in eaves and soffit areas only.
   - **f.** All residential subdivision developments shall include 25 percent greenspace, which shall be landscaped and accessible by all residents of the development; this space shall not include required fenced stormwater management areas.
   - **g.** There shall be an undisturbed buffer between all new subdivision developments and existing adjacent residential subdivisions a minimum of 50 feet and shall be landscaped in accordance with 604A of this ordinance.
2. *Commercial:*

a. All new commercial developments' air conditioning units and HVAC systems shall be thoroughly screened from view from the public right of way and adjacent properties by utilizing walls, fencing, roof elements, or landscaping.

b. The exterior finish of all elevations visible from a public street for all new structures shall be constructed of brick, stucco, cement board, glass and metal, decorative block or similar brand application of similar durable architectural materials. Awning materials shall be limited to canvas or metal.

c. All solid waste containers shall be screened from all public streets and adjoining properties in an enclosure comparable to the architecture of the primary structure.

3. *Industrial:*

a. All new industrial developments' air conditioning units and HVAC systems shall be thoroughly screened from view from the public right of way and adjacent properties by utilizing walls, fencing, roof elements, or landscaping.

b. The exterior finish of all elevations visible from a public street for all new structures shall be constructed of brick, stucco, cement board, glass and metal, tilt up concrete, decorative block or similar brand application of similar durable architectural materials. Awning materials shall be limited to canvas or metal.

c. All solid waste containers shall be screened from all public streets and adjoining properties in an enclosure comparable to the architecture of the primary structure.

4. *Institutional:*

a. All new institutional developments' air conditioning units and HVAC systems shall be thoroughly screened from view from the public right of way and adjacent properties by utilizing walls, fencing, roof elements, or landscaping.

b. The exterior finish of all elevations visible from a public street for all new structures shall be constructed of brick, stucco, cement board, glass, decorative block or similar brand application of similar durable architectural materials. Awning materials shall be limited to canvas or metal.

c. All solid waste containers shall be screened from all public streets and adjoining properties in an enclosure comparable to the architecture of the primary structure.

5. *Multi-Family:*

a. All new multi-family developments' air conditioning units and HVAC systems shall be thoroughly screened from view from the public right of way and adjacent properties by utilizing walls, fencing, roof elements, or landscaping.

b. The exterior finish of all elevations visible from a public street for all new structures shall be constructed of brick, stone, stucco, or cement board; vinyl can be utilized in eaves and soffit areas only.

c. All solid waste containers shall be screened from all public streets and adjoining properties in an enclosure comparable to the architecture of the primary structure.

d. All new residential subdivisions are required to install underground utilities and implement decorative poles/streetlights in accordance with city policies.

605 G. Structures permitted above the height limit.

The height limits of this ordinance shall not apply to church spires, belfries, silos, cupolas, domes, ornamental towers, monuments, water towers, observation towers, transmission towers, chimneys, smoke stacks, conveyor, flag pole, radio or television tower, mast or aerial, parapet wall not extending more than four feet above the roof line of the building; necessary mechanical appurtenances and other such structures not intended for human occupancy; provided such structure does not interfere with any established airport approach zones, airport protection zones, flight patterns or solar access.

605 H. Retail, large-format.

1. Applicability.

The standards of this section apply to all retail sales and service uses on sites that include more than 74,999 square feet of gross floor area (in aggregate).

2. Parking lots.

a. Large scale retail projects must design parking facilities as transitional spaces where users change modes of travel, from car, bus, or bicycle to pedestrian. The design of parking areas must therefore safely and attractively serve all transportation modes.

b. Parking areas must be distributed around large buildings on not less than two (2) sides in order to shorten the distance to other buildings and public sidewalks and to reduce the perceived scale of parking areas and paved surfaces.

c. In order to reduce the scale of parking areas, no single parking area may include more than 200 parking spaces unless divided into two or more sub-areas separated from each other by landscaping, access drives or public streets, pedestrian walkways, or buildings.

d. Placing large amounts of parking between the front door of buildings and the adjacent street contributes to a formless arrival experience for users, and creates a detached relationship between the primary building and the street. If more than 65% of the total off-street parking spaces for the entire site are located between the front façade of the principal building and the primary street abutting the site, additional landscaping, buffering and raised pedestrian walkway connection must be provided as a condition of development plan approval.

3. Pedestrian circulation.

a. At least one continuous internal pedestrian connecting walkway must be provided to link all abutting public sidewalks and on-site bus stops with the principal customer entrance of the principal building on the site. Such pedestrian connection must be at least five (5) feet in width. Walkways must feature items such as adjoining landscaped areas that include trees, shrubs, benches, flower beds, planters, ground cover, or other such materials for no less than 30% of their length.

b. Walkways, no less than seven (7) feet in width, must be provided along the full length of the building along any façade featuring a customer entrance, and along any façade abutting public parking areas. Such walkways must be located an average of six (6) feet from the façade of the building to provide planting beds for foundation landscaping, except where features such as arcades, display windows, planters or entryways are part of the façade.

c. Customer entrances must have weather protection features, such as awnings, arcades, or vestibules.

d. All internal pedestrian walkways that cross parking aisles or driveways must be distinguished from driving surfaces through the use of durable, low-maintenance surface materials such as pavers, bricks, scored concrete or scored and painted asphalt to enhance pedestrian safety and comfort. Raised walkways may be installed if elevated 6 inches with tapered side slopes and meet ADA standards.

4. Building design.

The following standards apply to all building facades and exterior walls that are visible from adjoining streets or properties

a. Buildings visible from public streets must include at least three (3) of the following features:

i. Variations in roof form and parapet height

ii. Clearly pronounced recesses and projections

iii. Wall plane off-sets (dimension established by building module)

iv. Reveals and projections and changes in texture and color of wall surfaces

v. Deep set windows with mullions

vi. Ground level arcades and second floor galleries/ balconies

vii. Other features that reduce the apparent mass of a building

b. Buildings must have architectural features that conceal rooftop equipment, such as HVAC units, from public view.

c. Each building must have a clearly defined, highly visible customer entrance featuring at least three (3) of the following elements:

i. Canopies or porticos
ii. Overhangs
iii. Recesses/projections
iv. Arcades
v. Raised corniced parapets over the door
vi. Peaked roof forms
vii. Arches
viii. Outdoor patios
ix. Display windows
x. Architectural details such as tile work and moldings that are integrated into the building structure and design
xi. Integral planters or wing walls that incorporate landscaped areas and/or places for sitting

5. Development agreement.

Prior to the issuance of building permits, the property owner must enter into a development agreement with the city. The agreement must include at least the following:

a. Provisions preventing the property owner from prohibiting or otherwise limiting, through contract or other legal device, the reuse of the building for retail or other uses allowed in the subject zoning district
b. Provisions requiring long-term maintenance of the property if the building is vacated
c. Provisions requiring the preparation of an adaptive reuse plan and/or a demolition plan acceptable to the city
d. Other provisions deemed necessary by the city to address the particular circumstances related to the project

606. CHAIN LINK FENCING

In all zoning districts, chain link fence is prohibited in front yards.

Article 7. ZONING DISTRICTS

701. ZONING DISTRICTS RELATION TO COMPREHENSIVE PLAN

Article 4 includes criteria whereby rezoning requests are evaluated for their consistency with the current, adopted City of Griffin Comprehensive Plan. The intent of the zoning districts described herein is to fulfill the planning and land use policy established by the Comprehensive Plan and its Future Land Use map, whereby zoning districts appropriately correspond to the land use categories on the Future Land Use Map as follows:

Table 7. 1 Zoning Districts to Comprehensive Plan Categories

FUTURE LAND USE CATEGORIES (2024 Comp. Plan):	ZONING DISTRICTS			
Low Density Residential	LDR-A	LDR-B	LDR-C	AG/R
Medium Density Residential	MDR	PRD	SHROD	
High Density Residential	HDR-A	HDR-B	PRD	SHROD
Office - Transitional	CBD	PCD		
Office - Professional	CBD	PCD	MOD	
Neighborhood Business	NBD			
Commercial	CBD	PCD		
Mixed Use	PRD	PCD	MU/TOD	
Downtown Hub	CBD	MU/TOD		
Industrial	PID			
Public/ Institutional	INST			
Park/ Recreation/ Conservation	PRD	AG/R	CONS	
Transportation/ Communication/ Utilities				

702. ESTABLISHMENT OF DISTRICTS

In order to accomplish the purposes of this ordinance as stated in Article 1, the following zoning district classifications are established within the incorporated area of the City of Griffin, Georgia:

Table 7. 2 Zoning Districts and Abbreviations

705	LDR-A	Low Density Residential "A"
706	LDR-B	Low Density Residential "B"
707	LDR-C	Low Density Residential "C"
708	MDR	Medium Density Residential
709	HDR-A	High Density Residential "A"
710	HDR-B	High Density Residential "B"
711	NBD	Neighborhood Business District
712	PRD	Planned Residential Development
713	CBD	Central Business District

714	PCD	Planned Commercial District
715	PID	Planned Industrial Development
716	INST	Institutional
717	AG/R	Agricultural/Residential
718	SPIOD	Special Public Interest Overlay District
719	AOD	Airport Overlay District
720	SHROD	Special Housing Revitalization Overlay District
721	PAO	Places of Assembly Overlay District
722	MU/TOD	Mixed Use/ TOD Overlay District
723	CONS	Conservation Subdivision
724	MOD	Medical Overlay District

703. ZONING TO APPLY WHEN LOT IS DIVIDED BY DISTRICT BOUNDARY LINE.

In the event that a district boundary line on the zoning map divides a lot of record held in one ownership on the date of passage of this ordinance, each part of the lot so divided shall be used in conformity with the regulations established by this ordinance for the district in which each such parcel is located. If the property owner or such a lot desires, he may extend the use allowed on the greatest portion of said lot beyond the district boundary line in accordance with setbacks and yard requirements for the district into which he is encroaching.

704. PERMITTED USES FOR ALL ZONING DISTRICTS

Except for use provisions as specified by Article 5 and other sections pertaining to infrastructure criteria, location criteria and/or overlay regulations, Table 7.3 establishes permitted, conditional, and special uses for all zoning districts. See Article 5 regarding interpretations of uses.

[Remainder of page intentionally left blank.]

Table 7. 3 Permitted Use Table by Zoning Category and Development

USE CATEGORY BY SPECIFIC TYPE P= Permitted by Right C= Conditional SU= Special Use ✓= Consult Supplemental Regulations	Supplemental Regulations	LDR-A/R-1*[6]	LDR-B/R-2*[6]	LDR-C/R-3*[6]	MDR/R-4	HDR-A*[7]	HDR-B*[7]	NBD	CBD	PCD	PRD*[8]	Mixed Use Overlay- Neighborhood	Mixed Use Overlay- Corridor	Mixed Use Overlay- Village	PID	INST.	Conservation Subdivision	AG/R	SPROD Underlying Zoning +	AOD	SHROD	Medical Overlay
AGRICULTURAL																						
Accessory Structures, Agricultural - See Accessory Uses	✓	P	P	P	P												P	P				
Community Garden	✓	SU	SU										SU		P	SU	P	P				
Farm Operations	✓																	P				
Farmstand	✓																P	P				
Feed, Seed and Fertilizer Sales										P					P			SU				
Greenhouse, Nursery	✓							P		P					P			SU				
Keeping of Chickens/Pigeons	✓																P	P				
Keeping of Bees	✓																P	P				
Livestock, see Farm Operations	✓																					
Riding Stables	✓																P	P				
Sale of Farm Goods on the premises	✓																P	P				
COMMERCIAL																			*5			
Ambulance service or rescue squad	✓								P	P					P							
Amusement or Commercial recreation facility	✓									P					P							
Animal Hospital, see Veterinary Services																						
Art shows, carnival rides, festivals, parades and special events of community interest. See section 721.												SU	SU	SU								
Bakery								P	P	P											SU	
Bank								P	P	P	SU											
Barbershop, beauty parlor								P	P	P											SU	
Car wash	✓							P	P	P					P							
Carnivals, see section 721	✓											SU	SU	SU								
Clinics, medical and dental	✓						SU	P	P	P	SU				P							P
Commercial Kennel	✓							P	P	P					P			SU				
Commercial recreation, Indoor										P	P	P*5	P*5	P*5	P							
Commercial recreation, Outdoor										P					P							
Convenience Store with gasoline or diesel fuel	✓							P (<2,500 sf)	P		SU											
Convenience Store without gasoline or diesel fuel	✓							P (<2,500 sf)	P		SU								SU		SU	
Day care, Nursery	✓						SU		SU	P	SU				P	P						SU
Dog Grooming	✓							P	P	P					P							
Eating establishments	✓							P	P	P		P*4	P*4	P*4	SU							
Eating establishments, Fast Food	✓							SU	P	P					SU							
Emergency Services																SU						P
Existing business and professional offices with no on-site storage of equipment and supplies																				P		

USE CATEGORY BY SPECIFIC TYPE P= Permitted by Right C= Conditional SU= Special Use ✓= Consult Supplemental Regulations	Supplemental Regulations	LDR-A/R-1*[6]	LDR-B/R-2*[6]	LDR-C/R-3*[6]	MDR/R-4	HDR-A*[7]	HDR-B*[7]	NBD	CBD	PCD	PRD*[8]	Mixed Use Overlay- Neighborhood	Mixed Use Overlay- Corridor	Mixed Use Overlay- Village	PID	INST.	Conservation Subdivision	AG/R	SPROD Underlying Zoning +[5]	AOD	SHROD	Medical Overlay
COMMERCIAL (continued)																						
Extended Stay Hotel/Motel	✓									SU					SU							
Farmer's Market	✓							P	P	P					P		P	P				
Financial Institution								P	P	P	SU				P							SU
Florist, Flower Shop							SU	P	P												SU	
Grocery shop (under 2500 sf), convenience store								P	P													
Grocery stores or other retail establishments over 15,000 sf										P		SU	SU	SU								
Health Club - see section 721												P	P	P								
Home Occupation as provided in section 503	✓	P	P	P	P	P	P				P						P					
Home Stay Bed and Breakfast	✓	SU	SU	SU	SU			SU		SU	SU	P		P			P	SU				
Hospital or Clinic	✓											P				SU						P
Hospital related out-patient services (Ambulatory and Diagnostic Clinics)																						P
Hotel							SU		P	P					P							SU
Kennel, Non-commercial (5 dogs max, must be at least 90 days old)		SU	SU	SU	SU																	
Laboratories, Medical and Dental																						P
Laundromat								P	P	P	SU										SU	
Licensed Day Care center							SU	P	SU		SU					P						SU
Locksmith shop								P	P	P												
Medical or dental services and clinics								P	P	P		P	P			P						
Motel									P	P					P							SU
Neighborhood retail, service or office uses	✓					SU	SU				SU											
Office space for governmental, business, professional: including but not limited to construction contractors, general contractors, heavy equipment contractors, special trade contractors, engineers, architects and land surveyors															P							
Office Uses									P	P			P	P								
Office, Medical or Clinic										P					P	P						P
Office, professional							SU		P	P	SU				P	P						SU
Office, temporary for on-site construction functions									P	P					P							
Outdoor recreation entertainment facilities												SU	SU	SU								
Personal Service business									P	P					P							
Personal Service establishment							SU	SU	P	P	SU				P				SU		SU	
Pharmacy																					SU	P
Photographer's studio								P	P	P												

USE CATEGORY BY SPECIFIC TYPE P= Permitted by Right C= Conditional SU= Special Use ✓= Consult Supplemental Regulations	Supplemental Regulations	LDR-A/R-1*[6]	LDR-B/R-2*[6]	LDR-C/R-3*[6]	MDR/R-4	HDR-A*[7]	HDR-B*[7]	NBD	CBD	PCD	PRD*[8]	Mixed Use Overlay- Neighborhood	Mixed Use Overlay- Corridor	Mixed Use Overlay- Village	PID	INST.	Conservation Subdivision	AG/R	SPROD Underlying Zoning+[5]	AOD	SHROD	Medical Overlay
COMMERCIAL (continued)																						
Recreational facility											P				P							
Research or experimental laboratory															P*[2]							
Restaurant, Café - see Eating Establishments								P	P	P					SU						SU	
Retail business							SU	P	P	P		P*[3]	P*[3]	P*[3]	SU				SU		SU	
Retail dry cleaner, see Laundromat																			SU			
Retail Uses													P	P								
Shoe Repair								P	P													
Sidewalk café - see section 722												P	P	P								
Stadiums - see section 721																						
Studio - art, music, dance, or other								P	P	P					P							
Theatre - see also section 721													P	P								
Veterinary Services, clinics or hospitals	✓						SU	P	P	P					P							
INDUSTRIAL																						
Building, facility, or land for the distribution of utility services															P	P						
Central Trash Collection Dumpsters															P*[3]							
Enclosed commercial storage									P													
Exterior display and sales facility															P							
Junkyard - see Open, outdoor storage															P*[3]							
Light Industrial Use															P							
Manufacturing															P*[2]							
Newspaper publishing facility									P	P		P*[2]	P*[2]	P*[2]	P							
Open, outside storage of materials and other stuff															P							
Radio and/or television and/or transmission tower	✓														P	SU		SU				
Repair, accessory structure or service facility incidental to the primary use															P*[4]							
Retail Business, Heavy Equipment															P*[3]							
Self-Storage Facility	✓									P					P							
Warehouse															P							
Warehouse or other storage facility											P				P							
Wholesale Business									P						P							
INSTITUTIONAL																						
Cemetery - see section 503	✓															P						
Churches, see Places of Worship																						
Commercial Trade or Vocational school															P							
Cultural facilities - see also section 721									P							P						

USE CATEGORY BY SPECIFIC TYPE P= Permitted by Right C= Conditional SU= Special Use ✓= Consult Supplemental Regulations	Supplemental Regulations	LDR-A/R-1*[6]	LDR-B/R-2*[6]	LDR-C/R-3*[6]	MDR/R-4	HDR-A*[7]	HDR-B*[7]	NBD	CBD	PCD	PRD*[8]	Mixed Use Overlay- Neighborhood	Mixed Use Overlay- Corridor	Mixed Use Overlay- Village	PID	INST.	Conservation Subdivision	AG/R	SPROD Underlying Zoning +	AOD	SHROD	Medical Overlay
INSTITUTIONAL (continued)																						
Funeral Home	✓						SU	P		P					P							SU
Government office/facility									P	P	SU	P*[2]	P*[2]	P*[2]	P*[3]	P						
Government uses													P	P								
Institutional uses													P	P								
Neighborhood Clubhouse		SU	SU	SU	SU	SU	SU										P					
Places of Worship - see section 721		SU	SU	SU	SU	SU	SU	SU	SU	SU	SU	SU	SU	SU	SU	SU	SU	SU	SU	SU	SU	SU
Private or Public Club, Lodge, Social Center or Meeting Room									P			P*[5]	P*[5]									
Publically owned building, facility, land									P	P					SU*[3]	P						
Schools: Colleges/Universities, elementary, middle, high, postgraduate, vocational/commercial																P						
RESIDENTIAL									*[1]	*[1]					*[1]							
Accessory dwelling unit - See Accessory Uses	✓																					
Aeronautical related uses																				P		
Airport related accessory uses																				SU		
Assisted living, retirement center, and nursing home		SU	SU	SU	SU	SU	SU				SU						SU	SU				
Boarding home, group home, and personal care home having 5 or less persons						P	P				P						P	P				
Boarding home, group home, and personal care home having 6 or more persons						P	P				SU						SU	SU				
Cluster Development	✓					P						P	P	P			P					
Dwelling , Single-Family Attached (including Townhouses)						P	P				P*[1]	P	P	P			P					
Dwelling, Multi-Family, Senior Housing						P	P		SU		P*[1]	P	P	P			P		P		P	
Dwelling, Single-Family Detached	✓-HDR-A	P	P	P	P	SU					P	P					P					
Dwelling, Two-family (duplex)						P					P						P					
Live/Work, Efficiency or Loft apartment over ground floor level	✓								P	P	P	P	P	P	P		P					
Manufactured Homes in accordance with section 605A	✓				P												P					
Residential dwelling, provided the existing structure was originally constructed as a residential dwelling (single or multi-family) and is located on West Poplar Street or West Solomon Street									P	P					P							
Vertical Mixed Use													P	P								
Watchman's or caretakers single family home	✓														SU		P					

USE CATEGORY BY SPECIFIC TYPE P= Permitted by Right C= Conditional SU= Special Use ✓= Consult Supplemental Regulations	Supplemental Regulations	LDR-A/R-1*[6]	LDR-B/R-2*[6]	LDR-C/R-3*[6]	MDR/R-4	HDR-A*[7]	HDR-B*[7]	NBD	CBD	PCD	PRD*[8]	Mixed Use Overlay- Neighborhood	Mixed Use Overlay- Corridor	Mixed Use Overlay- Village	PID	INST.	Conservation Subdivision	AG/R	SPROD	Underlying Zoning+	AOD	SHROD	Medical Overlay
OTHER																							
Accessory Uses and structures as provided in section 504	✓	P	P	P	P	P	P				P						P						
All permitted uses in underlying zoning district																						P	
Any permitted use in PCD															P								
Building facility or land for non-commercial park or recreation; Thoroughfares; Open space, or Public body of water and similar purposes																P							
Building, Facility, Land for Parking	✓								P						P								P
Building, facility, land for parking	✓								SU	SU					P								
Mass Transit Station													P										
Places of Assembly Overlay District (PAO)*[9]		SU	SU	SU							P				P								
Places of Assembly in accordance with Section 721		SU	SU	SU	SU																		
Railroad or bus passenger station									P														
Transit Station	✓								P				P			P							
Transportation terminal															P								
Transportation terminal in conjunction with a mass transit station													P										

*[1] Residential dwelling provided that the existing structure was originally constructed as a residential dwelling (single- or multi-family) and is located on West Poplar Street or West Solomon Street.
*[2] All operations are conducted entirely within a building and no noise, vibration, smoke, gas, fume, odor, dust fire hazard, radiation, or other injurious or obnoxious condition related to the operation creating a nuisance beyond the premises.
*[3] Such use shall be properly screened from view from adjoining streets and properties by a suitable fence or wall at least six feet in height above finished grade. The required fence or wall must provide for a reasonable visual separation between the use and adjoining properties.
*[4] The operation of the repair or service facility does not constitute a nuisance to adjoining properties and the operation is not otherwise prohibited in the zoning district.
*[5] Commercial uses are only allowed in multi-family developments, on the ground floor, not to exceed 20% of the floor area of the development exclusive of structured parking areas. In no case shall commercial uses exceed 20,000 square feet.
*[6] In order to maintain the integrity of single-family neighborhoods in the LDR-A, B, C zoning districts prohibit all uses except agricultural as noted and uses permitted under the Places of Public Assembly as provided in Section 721 of this ordinance.
*[7] Other neighborhood retail, personal service or office uses that are primarily for use of residents of the HDR-A, B zoning districts provided that they are conducted entirely in a permanently enclosed building and the buildings shall be an architectural design compatible with the dwelling within the HDR-A, B development.
*[8] Single-family attached dwelling, provided that such dwellings shall not represent more than 25% of total dwelling units within the proposed development nor shall such dwellings be established on the perimeter of the PRD development that adjoins LDR-A, B, C zoning districts.
*[9] A Special Use permit is required for all assembly uses over 3,000 square feet.

705. LOW DENSITY RESIDENTIAL "A" (LDR-A)

705 A. Intent.

It shall be the intent of this zoning district to be reserved for development of low density residential uses only, which is intended to provide and encourage a stable, healthy environment for single-family dwellings situated on lots having an area of one acre (43,560 square feet) or more. The provisions which apply to this district are designed to discourage encroachment of development that may adversely affect the residential integrity and character of the district.

705 B. Permitted and prohibited uses.

Table 7.3 shall govern the use of this zoning district, including permitted, prohibited, and conditional uses.

705 C. Physical requirements.

Unless otherwise specified in this ordinance, principal dwellings permitted in the LDR-A district shall conform to the following standards:

1. *Minimum lot area:* One acre or 43,560 square feet
2. *Minimum heated floor area per dwelling unit:* 2,000 square feet for single story; minimum building footprint for two or more story dwellings shall be 1,180 square feet
3. *Minimum street frontage:* 100 feet for non-cul-de-sac lots; 35 feet for cul-de-sac lots
4. *Minimum lot width:* 100 feet as measured at building line
5. *Minimum front yard:* 50 feet
6. *Minimum side yard:* 20 feet
7. *Minimum rear yard:* 25 feet
8. *Maximum building height:* 35 feet
9. *Maximum lot coverage by impervious surface:* 25 percent
10. All dwellings shall be provided with a paved driveway accommodating a minimum of two automobiles and a garage or carport for a minimum of two automobiles.
11. *100-year Floodplain.* No permanent structure shall be constructed within the boundary of the 100-year floodplain unless the structure meets minimum floodplain ordinance requirements as established in Chapter 50 – Floods of the Griffin Code of Ordinances.

705 D. Special uses.

The following uses shall be permitted, upon approval by the board of commissioners, as provided in section 406 in the Zoning Ordinance:

1. Uses permitted in the Places of Assembly Overlay District as provided in Section 721 of this ordinance.
2. Non-Commercial Kennel for keeping of five or more dogs, 90 days old or more.
3. Reserved.

706. LOW DENSITY RESIDENTIAL "B" (LDR-B)

706 A. Intent.

It shall be the intent of this zoning district to be reserved for development of low density residential uses only, which are intended to provide and encourage the formation and continuation of a stable, healthy environment for single-family dwellings situated on lots having an area of one-half acre (21,780 square feet) or more. The provisions are also intended to discourage development that may adversely affect the residential character and integrity of the district.

706 B. Permitted and prohibited uses.

Table 7.3 shall govern the use of this zoning district, including permitted, prohibited, and conditional uses.

706 C. Physical requirements.

1. *Minimum lot area:* One-half acre or 21,780 square feet
2. *Minimum heated floor area per dwelling unit:* 1,800 square feet for single story; minimum building footprint for two or more story dwellings shall be 1,050 square feet
3. *Minimum street frontage:* 80 feet for non cul-de-sac lots; 35 feet for cul-de-sac lots
4. *Minimum lot width:* 80 feet as measured at building line
5. *Minimum front yard:* 50 feet
6. *Minimum side yard:* 15 feet
7. *Rear yard:* 25 feet
8. *Maximum building height:* 35 feet
9. *Maximum lot coverage by impervious surface:* 35 percent
10. All dwellings shall be provided with a paved driveway accommodating a minimum of two automobiles and a garage or carport for a minimum of two automobiles.
11. *100-year Floodplain:* No permanent structure shall be constructed within the boundary of the 100-year floodplain unless the structure meets minimum floodplain ordinance requirements as established in Chapter 50 – Floods of the Griffin Code of Ordinances.

706 D. Special uses.

The following uses shall be permitted, upon approval by the board of commissioners, as provided in section 406 in the Zoning Ordinance:

1. Uses permitted in the Places of Assembly Overlay District as provided in Section 721 of this ordinance.
2. Non-Commercial Kennel for keeping of five or more dogs, 90 days old or more.
3. Reserved.

707. LOW DENSITY RESIDENTIAL "C" (LDR-C)

707 A. Intent.

It shall be the intent of this zoning district to be reserved for development of low density residential uses only, which are intended to provide and encourage the formation and continuation of a stable, healthy environment for single-family dwellings situated on lots having an area of one-third acre (14,520 square feet) or more. The provisions are also intended to discourage development that may adversely affect the residential character and integrity of the district.

707 B. Permitted and prohibited uses.

Table 7.3 shall govern the use of this zoning district, including permitted, prohibited, and conditional uses.

707 C. Physical requirements.

Unless otherwise specified in this ordinance, uses permitted in the LDR-C district shall conform to the following standards:

1. *Minimum lot area:* One-third acre or 14,520 square feet
2. *Minimum heated floor area per dwelling unit:* 1,600 square feet for single story; minimum building footprint for two or more story dwellings shall be 950 square feet
3. *Minimum street frontage:* 70 feet for non cul-de-sac lots; 35 feet for cul-de-sac lots
4. *Minimum lot width:* 70 feet as measured at building line
5. *Minimum front yard:* 40 feet
6. *Minimum side yard:* 15 feet
7. *Minimum rear yard:* 25 feet
8. *Maximum building height:* 35 feet

9. *Maximum lot coverage by impervious surface:* 40 percent
10. *Driveways:* All dwellings shall be provided with a paved driveway accommodating a minimum of two automobiles and a garage or carport for a minimum of two automobiles.
11. *100-year Floodplain:* No permanent structure shall be constructed within the boundary of the 100 year floodplain unless the structure meets minimum floodplain ordinance requirements as established in Chapter 50 – Floods of the Griffin Code of Ordinances.

707 D. Special uses.

The following uses shall be permitted, upon approval by the board of commissioners, as provided in section 406 in the Zoning Ordinance:

1. Uses permitted in the Places of Assembly Overlay District as provided in Section 721 of this ordinance.
2. Non-Commercial Kennel for keeping of five or more dogs, 90 days old or more.
3. Reserved.

708. MEDIUM DENSITY RESIDENTIAL (MDR)

708 A. Intent.

It shall be the intent of this zoning district to be reserved for development of medium density residential uses, which is intended to provide a transition between low density and high density residential development districts. The provisions which apply to this district are designed and intended to encourage the formation and continuation of a stable, healthy environment for the residents of medium density residential developments. The provisions are also intended to discourage encroachment of uses that could adversely affect the intended residential character and integrity of this district.

708 B. Permitted and prohibited uses.

Table 7.3 shall govern the use of this zoning district, including permitted, prohibited, and conditional uses.

708 C. Physical requirements.

Unless otherwise specified in this ordinance, uses permitted in the MDR district shall conform to the following standards:

1. *Minimum lot area:* One-fourth of an acre or 10,890 square feet
2. *Minimum floor area per dwelling unit:* 1,500 square feet for single story; with a minimum building footprint of 900 square feet for two or more story dwellings
3. *Minimum street frontage:* 60 feet for single-family dwellings on non cul-de-sac lots; 35 feet for cul-de-sac lots
4. *Minimum lot width:* 60 feet as measured at building line for single-family dwellings
5. *Minimum front yard:* 35 feet
6. *Minimum side yard:* Ten feet
7. *Minimum rear yard:* 25 feet
8. *Maximum building height:* 35 feet
9. *Maximum lot coverage by impervious surface:* 45 percent
10. *Buffer requirements:* Any R-4 development adjoining an R-1, R-2 or R-3 zoning district or property identified on the future land use map as low density residential development and proposing duplexes shall establish a minimum 30-foot landscaped buffer between the zoning districts, in accordance with section 604. Such buffer may be reduced to 20 feet, provided a landscaped earthen berm with a minimum height of three feet is established
11. *Driveways:* All single-family dwellings shall be provided with a paved driveway accommodating a minimum of two automobiles. Garages or carports shall be provided for a minimum of one automobile. No parking shall be permitted on the street.

12. *100-year Floodplain:* No permanent structure shall be constructed within the boundary of the 100-year floodplain unless the structure meets minimum floodplain ordinance requirements as established in Chapter 50 – Floods of the Griffin Code of Ordinances.

708 D. Special uses.

The following uses shall be permitted, upon approval by the board of commissioners, as provided in section 406 in the Zoning Ordinance:

1. Uses permitted in the Places of Assembly Overlay District as provided in section 721 of this ordinance.
2. Non-Commercial Kennel for keeping of five or more dogs, 90 days old or more.
3. Reserved.

709. HIGH DENSITY RESIDENTIAL "A" (HDR-A)

709 A. Intent.

It shall be the intent of this zoning district to be reserved for development of high density residential uses only. The provisions which apply to this district are designed and intended to encourage the formation and continuation of a stable, healthy environment for the residents of multi-family dwellings and to prevent developments that may adversely affect the intended character or integrity of the district. These provisions are also intended to permit neighborhood retail and office uses, to primarily serve residents of the development, by special use permit approved by the board of board of commissioners, and which will not adversely affect the residential character of the district.

709 B. Permitted and prohibited uses.

Table 7.3 shall govern the use of this zoning district, including permitted, prohibited, and conditional uses.

709 C. Special uses.

1. Neighborhood retail, service or office uses primarily for use of residents of the HDR-A district provided they are conducted entirely within a wholly and permanently enclosed building or buildings which shall be of an architectural design compatible with the dwellings within the HDR-A development.
2. Single-family detached dwelling units that will provide for the utilization of vacant or underserved parcels of land within existing neighborhoods.
   - **a.** *Minimum lot size:* 4,800 square feet
   - **b.** *Minimum front yard:* 25 feet
   - **c.** *Minimum side yard:* Ten feet
   - **d.** *Minimum rear yard:* 25 feet
   - **e.** *Minimum heated space:* 1,100 square feet

709 D. Physical requirements.

Unless otherwise provided in this ordinance, uses permitted in the HDR-A district shall conform to the following standards:

1. *Minimum initial tract size:*
   - **a.** *Duplexes:* One-fourth acre or 10,890 square feet
   - **b.** *Cluster development, single-family attached and multi-family developments:* Three acres; provided, however, the net minimum individual lot size shall not be less than 4,800 square feet for cluster developments or less than 2,460 square feet for single-family attached units
2. *Maximum density per acre:*
   - **a.** *Duplexes:* Eight units per acre

b. *Cluster development:* Six units per acre

c. *Single-family attached and multi-family developments:* 12 units per acre

3. *Minimum heated floor area per dwelling unit for duplexes:* 1,250 square feet with a minimum building footprint of 850 square feet for two or more story dwellings; cluster development, single-family attached and multi-family developments--900 square feet for one-bedroom units; 1,000 square feet for two-bedroom units and 1,100 square feet for three-bedroom units

4. *Minimum street frontage:* 200 feet

5. *Minimum lot width:* 200 feet as measured at building line

6. *Minimum front yard:* 25 feet

7. *Minimum side yard:* 20 feet, except that the side yard for interior, attached units shall be zero

8. *Minimum rear yard:* 25 feet

9. *Minimum distance between buildings:*

a. *Front to front:* 50 feet

b. *Front or rear to side:* 50 feet

c. *Side to side:* 20 feet

10. *Maximum building height:* 35 feet

11. *Maximum number of units per building:* eight (8)

12. *Maximum lot coverage by impervious surface:* 50%

13. *Minimum common open space:* Cluster development, single-family attached and multi-family developments shall preserve a minimum of 20 percent of the gross acreage common open space.

14. *Parking requirements:* All single-family, attached, two-family (duplex) and cluster dwellings shall be provided with a paved driveway accommodating a minimum of two automobiles. No parking shall be permitted on the street.

15. *Buffer requirements:* Any HDR-A development adjoining an LDR-A, LDR-B or LDR-C district or property identified on the future land use map as low density residential which proposes cluster, attached or duplex dwellings shall establish a minimum landscaped buffer of 30 feet along the common property boundary between the zoning districts in accordance with section 604. Such buffer may be reduced to 20 feet, provided a landscaped, earthen berm with a minimum height of three feet is established.

16. *Ownership requirements:* All of the land in single-family attached (townhouse and condominium) and cluster developments shall be owned initially by an individual, a corporation or other legal entity. Individual properties may be sold after a final plat has been approved by the City of Griffin Development Review Committee and recorded in the Office of the Superior Court Clerk of Spalding County. These developments shall also be subject to approval of restrictive homeowner's covenants providing for the maintenance of common open space, required stormwater management infrastructure, establishment and management of a homeowner's association.

17. *100-year Floodplain:* No permanent structure shall be constructed within the boundary of the 100-year floodplain unless the structure meets minimum floodplain ordinance requirements as established in Chapter 50 – Floods of the Griffin Code of Ordinances.

710. HIGH DENSITY RESIDENTIAL "B" (HDR-B)

710 A. Intent.

It shall be the intent of this zoning district to be reserved for development of high density residential uses only. The provisions which apply to this district are designed and intended to encourage the formation and continuation of a stable, healthy environment for the residents of multi-family dwellings and to prevent developments that may adversely affect the intended character or integrity of the district. These provisions are also intended to permit neighborhood retail and office uses which will primarily serve residents of the development. Such uses may be approved by the

board of commissioners as a special use permit, provided they will not adversely affect the residential character of the district.

710 B. Permitted and prohibited uses.

Table 7.3 shall govern the use of this zoning district, including permitted, prohibited, and conditional uses.

710 C. Special uses.

The following uses shall be permitted, upon approval as provided in section 406, in the HDR-B district:

1. Professional offices;
2. Licensed day care center;
3. Hotels;
4. Clinics;
5. Neighborhood clubhouse;
6. Funeral home;
7. Flower shop;
8. Other neighborhood retail, service or office uses primarily for use of residents of the HDR-B district provided they are conducted entirely within a wholly and permanently enclosed building or buildings, which shall be of an architectural design and scale compatible with the residential uses within the HDR-B development.

710 D. Physical requirements.

1. *Minimum initial tract size:*
   a. *Single-family attached and multi-family developments:* Four acres; provided, however, the net minimum individual lot size shall not be less than 1,850 square feet for single-family attached units
2. *Maximum density per acre:*
   a. *Single-family attached and multi-family developments:* 14 units per acre
3. *Minimum heated floor area per dwelling unit:* 800 square feet for one-bedroom units, 950 square feet for two-bedroom units and 1,100 square feet for three-bedroom units
4. *Minimum street frontage:* 250 feet
5. *Minimum lot width:* 250 feet as measured at building line
6. *Minimum front yard:* 25 feet
7. *Minimum side yard:* 20 feet, except that the side yard for interior, attached units shall be zero
8. *Minimum rear yard:* 25 feet
9. *Minimum distance between buildings:*
   a. *Front to front:* 50 feet
   b. *Front or rear to side:* 50 feet
   c. *Side to side:* 20 feet
10. *Minimum building height:* 35 feet
11. *Maximum number of units per building:* 12
12. *Maximum lot coverage by impervious surface:* 50%
13. *Minimum common open space:* Single-family attached and multi-family developments shall preserve a minimum of 20 percent of the development tract as common open space
14. *Buffer requirements:* Any HDR-B development adjoining an LDR-A, LDR-B or LDR-C district or property identified on the future land use map as low density residential shall establish a minimum landscaped buffer of 40 feet along the common property boundary between zoning districts in accordance with section 604. Such buffer may be reduced to 30 feet, provided a landscaped, earthen berm with a minimum height of three feet is established
15. *Parking requirements:* All single-family attached dwellings shall be provided with a paved driveway accommodating a minimum of two automobiles; multi-family units shall provide

parking in accordance with Article 8 of this ordinance. No parking shall be permitted on the street.

16. *Ownership requirements:* All of the land in a single-family attached (townhouse and condominium) and cluster development shall be owned initially by an individual, a corporation or some other legal entity. Individual properties may be sold after a final plat has been approved by the City of Griffin Development Review Committee and recorded in the Office of the Superior Court Clerk of Spalding County. These developments shall also be subject to approval of restrictive homeowner's covenants providing for the maintenance of common open space, required stormwater management infrastructure, establishment and management of a homeowner's association.

17. *100-year Floodplain:* No permanent structure shall be constructed within the boundary of the 100-year floodplain unless the structure meets minimum floodplain ordinance requirements as established in Chapter 50 – Floods of the Griffin Code of Ordinances.

[Remainder of page intentionally left blank.]

[This page intentionally left blank]

711. NEIGHBORHOOD BUSINESS DISTRICT

711 A. Intent.

It shall be the intent of this zoning district to promote and encourage the development and continued use of businesses located in and around the various neighborhoods of the city of griffin. These regulations are also intended to reduce traffic congestion, provide adequate off-street parking, prohibit the expansion of "strip" type business areas beyond existing "strip" development, and to discourage encroachment by other uses capable of adversely affecting the residential character of the district.

711 B. Ownership control.

All of the land in a neighborhood business district shall be owned initially by an individual, by a corporation or some other legal entity.

711 C. Permitted and prohibited uses.

Table 7.3 shall govern the use of this zoning district, including permitted, prohibited, and conditional uses.

711 D. Physical requirements.

All development shall conform to the dimensions, design, and other standards identified within Figure 711- NBD.

711 E. Storage.

No storage shall be permitted on the lot unless in a fully enclosed building.

711 F. Parking.

No automobile parking or service areas will be permitted within the required front yard setback or within 15 feet of the property line of an adjoining residential zoning lot. parking and services areas must be separated from adjoining residential lots by a suitable planting screen, fence or wall at least six feet in height above finished grade. The above-required screen, fence or wall must provide for a reasonable visual separation between the properties.

711 G. Loud speaking systems.

No outside loud speaking system shall be utilized prior to 7:00 a.m. or after 9:00 p.m. if directly adjacent to a residential zoned use.

711 H. Lighting.

All lights or lighting must be downcast lighting; arrangements for purposes of advertising, security or night operations must be directed away from adjoining or nearby residential zoning lots.

711 I. Exemptions

All neighborhood business structures built prior to the adoption of the ordinance will be exempt from the provisions of section 711 D. Physical requirements.

[Remainder of page intentionally left blank.]

[This page intentionally left blank]

Placeholder for Figure 711 – NBD cutsheet

[this page intentionally left blank]

712. PLANNED RESIDENTIAL DEVELOPMENT (PRD)

712 A. Intent.

It shall be the intent of this zoning district to encourage the best possible site plans and building arrangements under a plan of development rather than under lot-by-lot regulations. The developer benefits from better land utilization, economy in the provision of roads and utilities and flexibility in design. The city gains the advantage of a variety in building types, compatibility of use and optimum community development. The planned residential development is intended to encourage ingenuity and resourcefulness in land planning including a variety of housing types in a mixed use environment of residential and commercial services, to assure the provision of open space such as parks and recreational land and other facilities for the use of the occupants of the development, to provide for a more efficient and imaginative development of property and to facilitate efficient housing.

712 B. Ownership control.

All of the land in a planned residential development shall be owned initially by an individual, corporation or some other legal entity. Individual properties may be sold after a final plat has been approved by the City of Griffin Development Review Committee and recorded in the Office of the Superior Court Clerk of Spalding County. Such developments are also subject to approval of restrictive homeowner's covenants providing for the maintenance of common open space, required stormwater management infrastructure, establishment and management of a homeowner's association.

712 C. Permitted and prohibited uses.

Table 7.3 shall govern the use of this zoning district, including permitted, prohibited, and conditional uses.

712 D. Special uses.

The following uses shall be permitted in the PRD district upon approval by the board of commissioners as provided in section 406 of this ordinance. No commercial uses shall be approved on the perimeter of a PRD district so as to adjoin an LDR-A, LDR-B or LDR-C district or property identified on the future land use map as low density residential. The architectural style of all commercial structures shall be compatible and consistent with the character of the surrounding residential neighborhood.

1. Licensed day care center, nursery, private school;
2. Professional offices;
3. Convenience store with or without gasoline or diesel fuel;
4. Government office or facility;
5. Branch bank;
6. Laundromat;
7. Other neighborhood retail, service business or office use, primarily for the use of residents of the PRD district.

712 E. Physical requirements.

All development shall conform to the dimensions, design, and other standards identified within Figure 712- PRD.

712 F. Open space requirements.

A minimum of 25 percent of the total development shall be reserved for open space, parks, recreation or other similar uses; provided the following criteria are met:

1. The required yards, parking areas, stormwater infrastructure (detention pond), wetlands, utility easements and other non-buildable areas shall not be credited toward the minimum

open space requirements. Up to 25 percent of the land located within a noted floodplain, may be credited towards open space requirements, subject to review and approval by the City of Griffin Stormwater Department. The required open space shall be developed and landscaped by the developer in accordance with an approved site plan. Open space shall consist of contiguous property, where possible to allow connectivity of open areas.

2. If requested by the city, the owner of the planned residential development shall deed to the city the land set aside as required open space.

3. If the city does not request that the land be deeded to it, then, the open space shall be deeded to a property owner's association for the benefit of the residents. The organization of a property owner's association and its adequate financing for the discharge of its responsibilities shall be assured through acceptable private deed covenants running with the land.

4. In the event the property owner's association fails to maintain the open space properly, the city may serve written notice upon the property owner's association and upon the residents and owners of the planned residential development setting forth the manner in which the organization has failed to maintain the open space in reasonable condition. Said notice shall include a demand that such deficiencies of maintenance be corrected within 30 days thereof, and shall state the date and place of a hearing thereon which shall be held within 15 days of the notice.

5. If the deficiencies are not corrected within the said 30 days, the city, in order to preserve the taxable values of the properties within the planned residential development and to prevent the open space from becoming a public nuisance, may enter upon said open space and maintain the same until the property owner's association is prepared to provide proper maintenance.

6. The cost of such maintenance by the city shall be assessed ratably against the properties within the planned residential development that have a right of enjoyment and of the open space and shall become a tax lien upon said properties. The city, at the time of entering upon said open space for the purpose of maintenance, shall file a notice of such lien in the office of the clerk of superior court upon the properties affected by such lien within the planned residential development.

712 G. General deed covenants.

The entire planned residential development shall be included within private deed covenants running with the land to assure the continuance of the planned residential development in accordance with approved plans and development.

712 H. Structures for commercial and office uses.

Retail sales, services and offices may be conducted entirely within a wholly and permanently enclosed building or buildings, which shall be of an architectural design and scope compatible with the residential structures within the planned residential development.

712 I. Development in stages.

The entire planned residential development may be divided into logical geographical sections with specific and reasonable periods within which the development of each section must be commenced and completed subject to approval of the City of Griffin Development Review Committee (DRC).

712 J. Architectural standards.

Architectural standards are established for residential and commercial development within a PRD district.

1. *Residential construction.* The following standards pertain to residential construction:

a. Roof pitch in residential developments shall be a minimum of 6/12. Roof materials shall consist of asphalt or composite shingles, terra cotta, slate, cedar or standing seam metal. "Rolled" asphalt roofing materials shall not be used.

b. Brick, stone, concrete stucco, wood, hardy plank, vinyl or any combination thereof, shall be the only acceptable exterior finish materials.

c. Subdivision developments shall use a combination of compatible architectural styles and elevations to avoid repetition of dwelling unit appearance along any street.

d. Side and rear building elevations of attached residential developments shall be substantially consistent with the front building elevation.

e. Accessory structures shall be finished using materials identical to the principal dwelling.

2. *Commercial construction.* The following standards pertain to commercial construction:

a. Building materials used for exterior finishes shall consist of glass, metal, brick, stone, concrete stucco, decorative concrete block, solid wood, hardy plank, vinyl or similar brand applications or similar, durable architectural materials. Awning materials shall be limited to canvas or metal.

b. Architectural style within one block or other contiguous development unit shall be compatible and shall adhere to a single, consistent architectural theme compatible with the character of the surrounding neighborhood.

c. Side and rear building elevations of all commercial structures shall be substantially consistent with the front building elevation.

d. Placement of air-conditioning units and other mechanical systems and equipment shall be accomplished without detracting from the architectural integrity of the building or site. Generally, such equipment must be installed to the rear of the building or on the side, provided the view is partially obstructed through either the use of screening compatible with the building such equipment serves or landscaping. Rooftop equipment shall be completely screened from view from the public right-of-way as well as adjoining properties.

[Remainder of page intentionally left blank.]

[this page intentionally left blank]

Placeholder for Figure 712 – PRD cutsheet

[this page intentionally left blank]

713. CENTRAL BUSINESS DISTRICT (CBD)

713 A. Intent.

It shall be the intent of this zoning district to promote and encourage the development and protect the viability of the downtown commercial area of the city. The regulations which apply within this district are designed to encourage the formation and continuance of a stable, economically healthy and compatible environment for a mixture of commercial, (wholesale and retail), office, government services and residential uses that are located so as to provide the city convenient shopping and service facilities. These regulations are also intended to reduce traffic congestion, provide adequate off-street parking and avoid the development of "strip" type business areas capable of adversely affecting the basic commercial and office character of the district. It is also the intent of this Section to limit the extent of the CBD as appearing on the original zoning map of this ordinance.

713 B. Permitted and prohibited uses.

Table 7.3 shall govern the use of this zoning district, including permitted, prohibited, and conditional uses.

713 C. Special uses.

The following uses shall be permitted upon approval by the board of commissioners as provided in section 406 of this ordinance:

1. Licensed day care center, nursery or private school;
2. High-rise apartment building.

713 D. Physical requirements.

All development shall conform to the dimensions, design, and other standards identified within Figure 713- CBD.

713 E. Storage.

No storage shall be permitted on the lot unless in a fully enclosed building.

713 F. Access.

All lots in the CBD district shall have access to an arterial or collector street, either directly or indirectly via local street.

713 G. Parking.

No automobile parking or service areas will be permitted within the required ten buffer of the property line of any adjoining residential lot. If located within the original Downtown Commercial Historic District, public parking is provided; therefore, there are no specified parking requirements.

Parking and service areas must be separated from adjoining residential lots by a suitable buffer or screen as provided in section 604 of this ordinance.

713 H. Loud speaking systems.

No outside loud speaking systems shall be utilized.

713 I. Satellite dishes.

Ground-based satellite dishes shall not be located within the Downtown Commercial Historic District of the city as listed on the National Register of Historical Places.

713 J. Lighting.

All lights or lighting arrangements for purposes of advertising, security or night operations must be directed away from adjoining or nearby residential zoning lots.

713 K. New construction.

New construction located within the Downtown Commercial Historic District shall be subject to architectural standards of existing buildings or those standards established by the City of Griffin Historic Preservation commission in order to retain the integrity of the original Downtown Commercial Historic District.

713 L. Security bars.

1. *Definition.* For the purpose of this section, the following definition shall apply unless the context clearly indicates or requires a different meaning:

SECURITY BARS. Metal bars, including, but not limited to, wrought iron guards and sliding scissor gates, attached to or covering a window or glass door which are intended to provide additional protection against vandalism and burglaries.

2. *Prohibited use.* The installation of security bars shall be prohibited on windows and doors in the front of buildings within the commercial business district.

[Remainder of page intentionally left blank.]

Placeholder for CBD

714. PLANNED COMMERCIAL DEVELOPMENT (PCD)

714 A. Intent.

It shall be the intent of this zoning district to promote and encourage the clustering of commercial uses which occur along arterial thoroughfares; to promote and encourage the infill of commercial uses between existing commercial uses along arterial thoroughfares; to limit the number of access points from PCD to an arterial thoroughfare; to limit commercial development which occurs outside the CBD to areas on an arterial thoroughfare adjacent to existing commercial development.

The regulations which apply within this district are designed to encourage the formation and continuance of a stable, economically healthy and compatible environment for commercial and service uses that are located so as to provide the city with convenient, safe, attractive and efficient shopping and service facilities. These regulations are also intended to reduce traffic congestion, provide adequate off-street parking, prohibit the expansion of "strip" type business areas beyond existing "strip" development, and to discourage encroachment by other uses capable of adversely affecting the commercial character of the district.

The PCD district is also intended to encourage the best possible site plans and building arrangements under a plan of development rather than under lot-by-lot regulations. The developer benefits from better land utilization, economy in the provision of roads and utilities and flexibility in design. The city gains the advantage of variety in building types, compatibility of use and optimum community development. The planned commercial development is intended to encourage ingenuity and resourcefulness in land planning and to assure the provision of adequate land facilities for the use of the occupants of the development.

714 B. Ownership control.

All of the land in a planned commercial development shall be owned initially by an individual, by a corporation or some other legal entity. Individual properties may be sold after a final plat has been recorded with the properties subject to private deed covenants that assure the continuance of the Planned Development as originally approved and developed.

714 C. Permitted and prohibited uses.

Table 7.3 shall govern the use of this zoning district, including permitted, prohibited, and conditional uses.

714 D. Physical requirements.

All development shall conform to the dimensions, design, and other standards identified within Figure 714- PCD.

714 E. Storage.

No storage shall be permitted on the lot unless in a fully enclosed building.

714 F. Parking.

No automobile parking or service areas will be permitted within the required front yard setback or within 30 feet of the property line of an adjoining residential zoning lot. Parking and services areas must be separated from adjoining residential lots by a suitable planting screen, fence or wall at least six feet in height above finished grade. The above-required screen, fence or wall must provide for a reasonable visual separation between the properties.

714 G. Loud speaking systems.

No outside loud speaking system shall be utilized prior to 7:00 a.m. or after 9:00 p.m. if directly adjacent to a residential zoned use.

714 H. Lighting.

All lights or lighting arrangements for purposes of advertising, security or night operations must be directed away from adjoining or nearby residential zoning lots.

714 I. General deed covenants.

The entire planned commercial development shall be included within private deed covenants running with the land to assure the continuance of the planned commercial development in accordance with approved plans and development, unless waived by the zoning administrator.

714 J. Development in stages.

The entire planned commercial development may be divided into logical geographical sections with specific and reasonable periods within which the development of each section must be commenced and completed subject to approval of the City of Griffin Development Review Committee (DRC).

[Remainder of page intentionally left blank.]

Placeholder for Figure 714 - PCD

[this page intentionally left blank]

715. PLANNED INDUSTRIAL DEVELOPMENT (PID)

715 A. Intent.

It shall be the intent of this district to establish and protect sites for light industrial uses which are not significantly objectionable in terms of appearance, noise, odor, fumes, etc. to surrounding properties. The regulations which apply within this district are designed to encourage the formation and continuance of a compatible environment for uses of a light industrial nature, to protect and preserve undeveloped areas of the city which are suitable for such industries and to discourage encroachment by other uses which are capable of adversely affecting the limited industrial character of the district.

It is also the intent of this district to locate PIDs at or adjacent to existing industrial land. In all cases the establishment of a new PID or the expansion of an existing PID shall be as close as possible to existing industrial uses.

The PID district is also intended to encourage the best possible site plans and building arrangements under a plan of development rather than under lot-by-lot regulations. The developer benefits from better land utilization, economy in the provision of roads and utilities and flexibility in design. The City gains the advantage of variety in building types, compatibility of use and optimum community development. The planned industrial development is intended to encourage ingenuity and resourcefulness in land planning and to assure the provision of adequate facilities for the use of the occupants of the development. Review of the development plan by the City of Griffin Development Review Committee (DRC) is required to assure that the development is in compliance with all applicable codes, ordinances and design regulations.

715 B. Ownership.

All of the land in a planned industrial development shall be owned initially by an individual, by a corporation or some other legal entity. Individual properties may be sold after a final plat has been recorded with the properties subject to private deed covenants that assure the continuance of the planned industrial development as originally approved and developed.

715 C. Permitted and prohibited uses.

Table 7.3 shall govern the use of this zoning district, including permitted, prohibited, and conditional uses.

715 D. Special uses.

The following uses shall be permitted upon approval by the board of commissioners as provided in section 406 of this ordinance:

1. Retail business on the following conditions:
   - **a.** The business is incidental to a permitted use;
   - **b.** The business is located on the same premises as a permitted use; and
   - **c.** The business involves no open storage of any type.
2. Restaurants where the use is intended to serve the food needs of the industrial area.
3. Watchman's or caretaker's single-family dwelling on the following conditions:
   - **a.** The dwelling is located on the premises of a permitted use;
   - **b.** There is only one dwelling on a zoning lot; and
   - **c.** A member of the family residing in the dwelling must be employed by the industry as a watchman or caretaker.
4. Publicly owned building, facility or land.

715 E. Physical requirements

All development shall conform to the dimensions, design, and other standards identified within Figure 715- PID.

715 F. Storage.

No storage shall be permitted on the lot unless provided such use is properly screened from view from adjoining streets and properties by a suitable fence or wall a minimum of six feet in height above finished grade. The required fence or wall must provide for a reasonable visual separation between the use and adjoining properties.

715 G. Parking.

No automobile parking or service areas will be permitted within the required front yard, side yard or rear yard setbacks.

715 H. Loud speaking systems.

No outside loud speaking systems shall be utilized prior to 7:00 a.m. or 9:00 p.m. if directly adjacent to a residential zoned use.

715 I. Lighting.

All lights or lighting arrangements for purposes of advertising, security, or night operations must be directed away from adjoining or nearby residential zoning lots.

715 J. General deed covenants.

The entire planned industrial development shall be included within private deed covenants running with the land to assure continuance of the planned industrial development in accordance with approved plans and development unless waived by the zoning administrator.

715 K. Other required standards.

No use shall be permitted in a planned industrial development that exceeds state and federal guidelines for allowance emissions and discharge of effluents into the air, water or soil.

No use shall be allowed in a planned industrial development that creates unabated noise creating a nuisance as defined under Georgia Law.

[Remainder of page intentionally left blank.]

Placeholder for 715 PID

[this page intentionally left blank]

716. INSTITUTIONAL (INST.)

716 A. Intent.

It shall be the intent of this zoning district to reserve land for institutional uses only. The regulations, which apply within this district, are designed to encourage the formation and continuance of a stable, economically healthy and compatible environment for institutional uses that are located so as to provide nearby areas with convenient facilities. These regulations are also intended to reduce traffic congestion, provide adequate off-street parking, avoid the development of "strip" type business areas and discourage encroachment by other uses capable of adversely affecting the public/semi-public character of the district.

In most instances, Institutional uses are not for profit and exempt from ad-valorem taxation.

716 B. Permitted and prohibited uses.

Table 7.3 shall govern the use of this zoning district, including permitted, prohibited, and conditional uses.

716 C. Special uses.

The following uses shall be permitted, upon approval by the board of commissioners as provided in section 406 of this ordinance:

1. Hospital, clinic or care home, provided that: the lot has an area of a minimum of three acres (130,680 square feet); no building is constructed within 75 feet of the property line of any adjoining residential lot; the lot shall front an arterial or collector street; no automobile parking will be permitted within the front yard setback or within 30 feet of the property line of any adjoining residential lot; parking and/or service areas are separated from adjoining residential lots by a suitable planted screen, fence or wall a minimum of six feet in height above finished grade and which provides for a reasonable visual separation between the properties.

716 D. Physical requirements.

All development shall conform to the dimensions, design, and other standards identified within Figure 716- INST.

[Remainder of page intentionally left blank.]

[this page intentionally left blank]

Placeholder for 716

[this page intentionally left blank]

717. AGRICULTURAL/RESIDENTIAL (AG/R)

717 A. Intent.

It shall be the intent of this zoning district to provide for the conservation and maintenance of land resources of the City of Griffin, Georgia, used for farming, agriculture, livestock, husbandry, timber and related purposes. The regulations, which apply within this district, are designed to encourage the formation and continuance of a stable, economically healthy and compatible environment for farming uses. These regulations are also intended to reduce traffic congestion, provide adequate off-street parking, avoid the development of "strip" type business areas and discourage encroachment by other uses capable of adversely affecting the farming character of the district.

717 B. Permitted and prohibited uses.

Table 7.3 shall govern the use of this zoning district, including permitted, prohibited, and conditional uses.

717 C. Special uses.

The following uses shall be permitted, upon approval by the board of commissioners as provided in section 406:

1. Feed, seed and fertilizer retail sales;
2. Kennel;
3. Radio and television tower;
4. Nursery (landscape materials, plants, etc.).

717 D. Physical requirements

All development shall conform to the dimensions, design, and other standards identified within Figure 716- AG/R.

[this page intentionally left blank]

Placeholder for 717 – AG/R

[this page intentionally left blank]

718. SPECIAL PUBLIC INTEREST OVERLAY DISTRICTS (SPIOD)

718 A. Intent.

The intent of the special public interest overlay districts established in the following sections is to protect and enhance specific lands, uses and structures that, by virtue of their type or location, have characteristics that are distinct from the lands and structures outside such overlay districts. It is the intent of the board of commissioners to permit, insofar as possible, those uses and structures that would otherwise be permitted, provided that reasonable and necessary conditions are met that insure the protection and enhancement of said lands, uses and structures.

718 B. General.

1. The provisions of this section apply to all lands, uses and structures in areas approved by the board of commissioners as Overlay Districts. Such lands, uses and structures are also subject to the provisions of their underlying zoning designation; provided, however, that where the provisions of this section are more restrictive than the provisions of the underlying designation, the provisions of this shall section shall apply.
2. The special public interest overlay districts established in this section generally operate by establishing performance standards to effectuate the purposes of the district. Except as otherwise provided, they do not supersede the regulations of the underlying district.
3. Land lying within special public interest overlay districts shall remain part of the underlying zone district(s) established by other provisions of this ordinance, and may, in addition, lie in one or more overlay districts in accordance with the designation of each.
4. Unless otherwise specified in this ordinance creating the special public interest overlay districts, when any lot or use is partially located within a special public interest overlay district, the remainder of the lot or use shall not be subject to the provisions of this section.

718 C. Creation of special public interest overlay districts.

1. Amendments to this section shall be adopted in accordance with the provisions of section 404 upon the recommendation of the board of commissioners, planning and zoning board, city manager or director of planning and development department.
2. Every recommendation for creation of a special public interest overlay district or addition of land thereto shall address the following as applicable:
   - **a.** A statement of purpose and intent shall specify the nature of the special and substantial public interest involved and objectives to be promoted by the creation of the special public interest overlay district and imposition of the regulations proposed therefore;
   - **b.** Proposed district boundary shall be depicted on one or more maps that shall also display all other zoning districts applicable to the property proposed for inclusion in the district;
   - **c.** Regulations proposed to promote the special purposes of the district.
3. Regulations proposed with any special public interest overlay district shall be designed to reasonably promote the purposes of the district and may require or address any of the following, in addition to or in lieu of other regulations affecting property within the district:
   - **a.** Submission of specifically detailed site plans, building plans, elevations and maps showing the relation of proposed development to surrounding or otherwise affected property in terms of location, scale or intensity, character and continuity;
   - **b.** Protection of features designated as being of special concern within the district;
   - **c.** Mixtures or limitations of permitted uses;
   - **d.** Special performance standards and development regulations;
   - **e.** Other matters as appropriate to promote the special public interests of the district.

718 D. Mapping of special interest overlay districts.

Upon approval of a special public interest overlay district, by adoption of an ordinance by the board of commissioners amending the zoning ordinance, a map of the district boundaries shall be incorporated into the ordinance, by reference, and constitute an integral part thereof, overlaying the official zoning map of the city.

719. AIRPORT OVERLAY DISTRICT (AOD)

719 A. Intent.

The airport overlay district (AOD) is intended to protect an environment for the viable conduct of a general aviation airport facility. These regulations are also designed to encourage and foster the formation and continuance of uses compatible with a general aviation airport, uses compatible with a general business park and preserves undeveloped airport uses that are suitable for such activities.

719 B. Establishment and boundaries of the AOD.

The boundaries of the AOD shall conform to the limits of the area as depicted on the City of Griffin Zoning Map. In lieu of a metes and bounds description, the overlay district boundaries may be described by fixing points of beginning and end in the centerline of a street and the distance on one or both of the sides from the centerline to which the AOD shall extend, or may be established by description of coterminous boundaries with the property boundaries of lots along such street or any combination of these methods. These surfaces shall be superimposed over the City of Griffin Zoning maps to delineate those areas covered by the AOD district.

719 C. Permitted and prohibited uses.

Table 7.3 shall govern the use of this zoning district, including permitted, prohibited, and conditional uses.

719 D. Special uses.

The following uses shall be permitted upon approval by the board of commissioners as provided in section 406 of this ordinance:

1. Airport related accessory uses.

719 E. Physical requirements.

All uses in the AOD shall be subject to the size, yard, setback and other requirements set forth in the underlying zone district(s), unless a more restrictive standard is established by the AOD.

720. SPECIAL HOUSING REVITALIZATION OVERLAY DISTRICT (SHROD)

720 A. Intent.

The special housing revitalization overlay district (SHROD) is intended to encourage housing and economic development activities in older residential mixed-use neighborhoods in the city. The SHROD is intended to supplement the base zoning in an area by imposing additional regulations designed to achieve a desirable, active urban environment that includes a substantial residential component. These overlay districts are also intended to enhance older areas of the city that may contain large abandoned mill buildings by providing for specific regulations designed to facilitate the continued viability, reuse and redevelopment of the buildings. The overlay districts may also serve to preserve contributing historical structures within the city while preserving the overall character of the building(s) and neighborhood.

720 B. Establishment and boundaries of the SHROD.

The boundaries of the SHROD shall conform to the limits of the area as depicted on the City of Griffin Zoning Map. In lieu of a metes and bounds description, the overlay district boundaries may be described by fixing points of beginning and end in the centerline of a street and the distance on one or both of the sides from the centerline of a street and the distance of one or both of the sides from the centerline to which the SHROD shall extend or may be established by description of coterminous boundaries with the

property boundaries of lots along such street, or any combination of these methods. These surfaces shall be superimposed over the City of Griffin Zoning Maps to delineate those areas covered by the SHROD district.

720 C. Permitted and prohibited uses.

All uses permitted by right in the underlying zoning district(s), shall be permitted in the SHROD; also refer to Table 7.3 for all permitted uses.

1. Special uses.

The following uses shall be permitted upon approval by the board of commissioners as provided in section 406 of this ordinance:

2. The following commercial uses are allowed in the SHROD zone to reduce traffic in the area by providing access to minor daily necessities on site and to improve the economic viability of the residential development by allowing limited mixed-use development. At the same time, commercial uses are limited to assure that residential uses remain the dominant use in the zone. These uses are allowed in multiple dwelling and condominium structures only.

The uses shall be limited to the ground floor (the first habitable floor) of the building and shall be limited to 20 percent of the floor area of the development, exclusive of structured parking areas. However, in no case shall commercial uses exceed a maximum of 20,000 square feet of the total floor area of the development.

a. Convenience store;
b. Barber shop, beauty shop, tanning salon;
c. Florist, plant, gift shop;
d. Retail dry cleaners, Laundromat;
e. Drugstore;
f. Coffee shop, bakery;
g. Other retail uses, primarily for use of residents of the SHROD development.

720 D. Physical requirements.

All uses in the SHROD shall be subject to the size, yard, setback and other requirements set forth in the underlying zone district(s) unless a more restrictive standard is established by the SHROD.

1. *Minimum development size:* Two acres
2. *Maximum density per acre:* 20 units per acre. This maximum density may be increased in certain instances if permitted in section 719 F below
3. *Minimum floor area per dwelling unit:* 700 square feet for studios, 800 square feet for one-bedroom units, 900 square feet for two-bedroom units and 1,050 square feet for three-bedroom and larger units
4. *Minimum front-yard:* Zero (0)
5. *Minimum side-yard:* Zero (0)
6. *Minimum rear-yard:* Zero (0)
7. *Maximum building height:* 50 feet
8. *Front doors:* The front doors of all dwelling units do not necessarily have to face a public street.
9. *Minimum open space requirement:* Ten percent of the gross land area of the development.
10. *100-year Floodplain:* No permanent structure shall be constructed within the boundary of the 100-year floodplain unless the structure meets minimum floodplain ordinance requirements as established in Chapter 50 – Floods of the Griffin Code of Ordinances.

720 E. Amenity bonuses.

1. *Special amenity bonuses.* Special amenity bonuses for increased density are intended to provide incentives to improve the livability of multiple-family developments for their residents and to promote family oriented multiple-family developments. The amenity bonuses are

designed to allow additional dwelling units in a manner that is still consistent with the purposes of the multiple family zones.

The bonuses are applicable to a range of development sizes. However, they may be more practical, feasible or workable for large projects. Not all bonus options will be applicable for all situations. The amenity options are designed to provide incentives, while leaving the specific choices to the developer.

The amount of the bonus for each option is a result of balancing several factors including:

a. The likelihood that the amenity will be provided without the use of incentives;

b. The potential cost to the developer;

c. The importance of the amenity.

2. *Regulations.*

a. *Qualifying types of development.* The amenity bonus provisions are applicable to multi-dwelling and condominium apartment developments in a SHROD.

b. *Computation of the bonus.* The percentages of all bonus options included in the development project are added together. The total is then applied to the allowed number of dwelling units to determine the additional units allowed. Fractions of additional units earned are not counted.

c. *Maximum bonus.* The maximum density increase allowed for a development is 12 percent.

d. *Compliance with the standards.* The amenity bonus standards must be met in full to receive the bonus; exceptions are prohibited. In addition, adjustments to the development standards of the base zone or overlay district are prohibited if the project is to receive any density bonus. It is the responsibility of the applicant to document that all of the amenity bonus requirements are met.

e. *Base zone development standards.* The additional dwelling units must comply with all applicable development standards.

f. *Covenants.* The entire SHROD development shall be included within private deed covenants running with the land to assure the continuance of the SHROD in accordance with approved plans and development. The city attorney must approve the covenant as to form. The covenant must be recorded prior to issuance of building permits for the project.

3. *Amenity bonus options.*

a. *Indoor and outdoor recreational facilities.* Indoor recreational facilities may include gym, spa, racquetball courts, and other indoor recreational facilities. Outdoor recreational facilities may include such facilities as tennis, basketball or volleyball courts, ball field, swimming pool, horseshoe pit, running or walking trail, gazebo with permanent picnic tables and barbecue pit and similar facilities. The density bonus is one percent for each $5,000.00 of the overall project cost spent on outdoor recreational facilities. There is a maximum of a five percent density increase allowed for this bonus option.

b. *Children's play areas.* The density bonus for this amenity is two and one-half percent. A qualifying children's play area must comply with all of the following standards:

i. *Size and location.* Each child's play area must be at least 1,000 square feet and clearly delineated. Children's play areas must be separated from any other outdoor recreational facilities.

ii. *Play equipment.* Each children's play area must include a play structure at least 100 square feet in area, a swing structure with a minimum of four swings, and at least one of the following: a slide, permanent sandbox, permanent wading pool or other children's play equipment commonly found in a public park. Equipment must be constructed of adequate materials to comply with safety standards and to match expected use.

iii. *Fencing.* Each child's play area must be fenced along any perimeter that is within 20 feet of a street, alley, property line, driveway, service or parking area. The fence shall be any type of chain link.

c. *Storage areas.* The density bonus for this amenity is seven percent. The bonus is allowed if all dwelling units are provided with interior storage, including but not limited to shelve

and drawer space in the kitchen, bedroom closets in each bedroom, linen closet in hallway or bathroom and entry closet; and additional storage for large items, including but not limited to areas that are dry and have locks for items such as barbecues, bicycles, storage boxes and sports equipment.

721. PLACES OF ASSEMBLY OVERLAY DISTRICT (PAO)

721 A. Place of assembly.

A structure, portion of a structure or area (either indoor or outdoor), including, but not limited to, movie theaters; concert halls; stadiums; amusement parks; carnivals; churches; elementary, middle, high, secondary and post graduate schools; day care centers; private commercial schools, such as martial arts or dance studios; clubs, lodges and arenas, designed primarily for people to gather to observe or participate in a single event or series of single events, including but not limited to the presentation of a motion picture, a concert, an educational presentation, a sermon, an inspirational presentation, a rally, a lecture, a drama, dance, musical or other live performance, or a sporting event.

721 B. Assembly district regulations.

The purposes of this district are to encourage the beneficial development assembly uses and to properly regulate such uses in a non-discriminatory manner.

It is the express intention of the board of commissioners that, in the event of any ambiguity in the language of this article, the administration and staff of the city shall interpret this article in the manner that best complies with all applicable federal laws, including but not limited to the Religious Land Use and Institutionalized Persons Act (RLUIPA), 42 U.S.C.A. Section 2000cc, et seq.

721 C. Overlay district.

This district is intended as an overlay district regarding and allowing the establishment of assembly uses within the areas described in this section. Unless otherwise provided, underlying district uses continue as permitted uses. Standards set out in this section shall control over any underlying district regulations. Front, rear and side yard setback requirements and all other development regulations not otherwise addressed in this section, set by the underlying zoning classification shall control, unless modified by the board of commissioners, as a condition for the assembly district.

721 D. Applicable area.

The area included in the assembly district shall be shown on the City of Griffin Zoning Map and shall include any areas subsequently designated by the board of commissioners.

721 E. Uses permitted only upon approval of the Zoning Administrator.

1. Places of Assembly locating into shopping centers or building(s) under 3,000 square feet subject to the following conditions:
   - **a.** Maximum occupancy based on formulas contained in the Statewide Minimum Building Code (ICC; International Congress Code, with Georgia amendments)
   - **b.** Fire and life safety compliance based on Inspection
   - **c.** Register with the City of Griffin Occupational Tax Permit (non-profit)
   - **d.** Upon vacating this location for its principal site, the PAO will be voided.
2. In making a determination as to whether or not an application for such use shall be approved at a particular time and location, the zoning administrator shall also consider the potential impacts, on existing or anticipated surrounding developments, Number of Parking and peak traffic impacts. Upon a finding that a particular use conforms to the intent and requirements of this Section, the use may be approved by the Zoning Administrator.

3. The administrative approval shall be for a period of two years and if the use is not in operation within six (6) months the PAO will be voided.

721 F. Uses permitted only upon approval of the board of commissioners.

1. Because of their special demands upon public services and facilities, and their potential for imposing significant financial burdens upon the city if established within certain timeframes and at particular locations, the uses listed below shall be special uses within the assembly district, but only upon approval of the board of commissioners, after recommendation by the planning and zoning board.

   In making a determination as to whether or not an application for such use shall be approved at a particular time and location, in addition to the standards contained in section 406 of this Ordinance, the board of commissioners shall consider the potential financial burdens to the city that would be generated, the potential impacts, on existing or anticipated surrounding developments, noise and peak traffic impacts and the potential special demands upon public services and facilities. Upon a finding that a particular use conforms to the intent and requirements of this Section, the use may be approved by the board of commissioners. If approval for such use is granted, the board of commissioners may attach special conditions to the approval which have as their purpose minimizing potential negative impacts and burdens on public finances, facilities and/or services as well as surrounding properties and travelers on the City's streets and sidewalks.
2. The following uses shall be allowed as special uses within the assembly district only upon approval of the board of commissioners and subject to the conditions listed in subsection 3:
   a. Place of assembly.
3. Said uses shall:
   a. Be located on a lot fronting a public right-of-way, classified as either an arterial or collector street;
   b. Be located on a tract of land not less than two acres in area and having a street frontage of not less than 200 feet.

721 G. Parking and loading regulations.

For each use, parking shall meet the minimum requirements established in article 8 of this ordinance and shall be provided in the rear yard or within that portion of the side yard which lies between a main building and the interior side lot line, except as otherwise provided in this section.

721 H. Height regulations.

No building shall exceed three stories in height nor shall it exceed 35 feet in height, except when a height variance is granted as defined and described in section 410 of this ordinance.

721 I. Buffers.

The potential for negative visual impact on adjoining uses by assembly district uses is substantial. Therefore, buffers are required for the protection of adjoining land uses.

A natural or manmade planted buffer shall be maintained along the property boundary of any assembly district use which abuts a non-assembly district use according to the following schedule:

1. *Residential uses or districts:* A buffer having a minimum horizontal dimension of 30 feet shall be provided, provided that if the owner prefers, a four (4) foot high bermed buffer of 20 feet in depth is allowed;
2. *Business park and office park uses:* A buffer having a minimum horizontal dimension of 20 feet shall be provided.

Buffers shall be permanently maintained as indicated on the approved site plan, subject to inspection by the City of Griffin, and consistent with any other property improvement. The dimension of the buffer shall not be in addition to any other landscaping requirements of this Section.

As the purpose of the buffer is to visually screen and distance the uses of the assembly district from adjoining uses, one-half of all plant materials shall consist of one or more species that retain foliage throughout the year. Provision of opaque fencing, though desirable, shall not decrease the horizontal dimension of the required buffer.

Within the assembly district, those uses identified as permitted uses may utilize the buffer requirement in computing the overall percentage of landscaping required by the tree preservation and landscaping ordinance.

721 J. Currently existing uses.

No existing use as of the date of this ordinance and included in the areas described in section 721D shall become a non-conforming use as a result of the adoption of the article.

[Remainder of page intentionally left blank.]

[this page intentionally left blank]

722. MIXED USE/TOD OVERLAY DISTRICT

722 A. General provisions.

1. *Scope of regulations.*

This ordinance establishes standards and procedures that apply to any development, use, alteration, height, parking, open space, public space and building that lies, in whole or in part, within the Mixed Use/TOD Overlay District , hereinafter referred to as the Griffin Overlay District. The Griffin Overlay District is based upon the urban design and development guidelines included in the Downtown Griffin Livable Centers Initiative (LCI) plan, Griffin LCI Area Design Guidelines, as well as other associated plans. The plans call for a community that incorporates higher design standards in the downtown Griffin area and near the proposed commuter rail station while providing a mix of commercial, office, recreation, and housing options.

Wherever the underlying zoning regulations are in conflict with the provisions of this overlay district, the regulations of this overlay district shall apply.

2. *Statement of purpose and intent.*

The purpose and intent of the Board of Commissioners in establishing the Griffin Overlay District is as follows:

a. To promote the development of a more dynamic, mixed-use district of appropriate scale and magnitude in the downtown Griffin area;

b. To design and arrange structures, buildings, streets, and open spaces to create an inviting, walkable, human-scale environment as well as active ground floor commercial spaces;

c. To ensure a proportional relationship of surrounding buildings with respect to the general spacing of structures, building mass and scale, and street frontage by using techniques to achieve compatibility;

d. To provide for connectivity of streets and communities and reduce the dependence on automobile use by increasing the ease of movement and opportunities for alternative modes of travel;

e. To promote the preservation of historic structures that reflect the history, character and architecture of the City of Griffin;

f. To provide property owners, builders and developers with a clear description of criteria used to review and evaluate the project;

g. To reclaim industrial land; and

h. To implement the policies and objectives of the Comprehensive Plan and other adopted planning documents within the Griffin Overlay District.

3. *Applicability of regulations.*

This ordinance applies to each application for a business license, land-disturbance permit, building permit or sign permit which involves the development, use, alteration, or modification of any structure or land where the subject property is located in whole, or in part, within the boundaries of the Griffin Overlay District. The procedures, standards, and criteria apply only to that portion of the subject property within the boundaries of the Griffin Overlay District. This ordinance contains regulations for new construction, existing building renovation and rehabilitation and public improvements to encourage the orderly development within and along the edges of the central business district and the future commuter rail station.

The ordinance divides development into two types, new construction and existing buildings. Depending upon the project scope and existing building status and condition, new construction standards may apply to an existing building. Design review and a certificate of compliance are required for all development.

a. Design review and a certificate of compliance by the Planning and Development Services Department are required for all new construction, existing building renovation or rehabilitation within the Griffin Overlay District. Plan submittal is required for buildings built on vacant lots after adoption or for the replacement of demolished buildings as well as any exterior rehabilitation or renovation.

i. *Exceptions:*

The Planning and Development Service Department Director can deem the project a minor application which requires more limited submittals from those outlined in section 721 B, which will be determined on case by case basis.

a. "Minor Modifications" are small deviations from otherwise applicable standards of this ordinance that may be approved by the Planning and Development Services Director without being required to apply for conceptual and final plan submittal. Minor modifications are to be used when the limited nature of the modification requested, and the unlikelihood of any adverse effects on nearby properties or the neighborhood, make it unnecessary to complete a formal process.

1. *Applicability:*

The Planning and Development Services Director may approve a minor modification of up to a maximum of ten (10) percent from only numeric development standard in this ordinance provided that the intent of this ordinance is met. At no time shall the Planning and Development Services Director approve a minor modification that results in the following:

a. An increase in the overall project intensity, density, or impervious cover;

b. Change in permitted uses; or

c. Design compatibility, based on this ordinance, is compromised.

b. Routine maintenance does not require design review or a certificate of compliance.

b. *Structures:*

The City of Griffin has a vast array of contributing historic structures that should be preserved and possibly adaptively re-used if their original use is no longer practical. The following criteria should be used by staff to determine if a structure is contributing or non-contributing. It also establishes the sections of the code that should be used for each type of structure

i. *Contributing Structures:*

a. The building adds to the historical or architectural qualities of the overlay;

b. The building retains its physical integrity;

c. The building is 50 years old or older;

d. If a building is 50 years old or older and considered contributing, development must comply with section 722 L: Existing Buildings.

ii. *Non-contributing Structures:*

a. The building does not add to the historical or architectural qualities of the overlay;

b. The building has had inappropriate and irreversible alterations or additions;

c. Existing Buildings which are less than 50 years old and possess no distinguishing architectural features, are hereby determined to be non-contributing, and may be maintained, demolished or renovated. If a building of this type replaced with a new building or undergoes a substantial rehabilitation, it must comply with sections 722 D-722 K.

iii. *Demolition:* Design review by the City Staff is required if the building is 50 years or older. Staff shall determine whether or not the building is contributing or non-contributing when determining the approval or denial of a request for demolition in accordance with the criteria established above. Contributing buildings shall be retained unless the applicant can provide a condition report and structural letter from a licensed building inspector or engineer who determines the building unsalvageable. The City Staff may call on the building official to provide them with a report on the state of the repair and structural stability of the structure under consideration. Request for demolition must be accompanied by a plan for the replacement of the building.

4. *District boundaries and map.*

a. The boundaries and development categories of the Griffin Overlay District are described below and shall be established by a zoning map amendment adopted pursuant to this ordinance which shall be incorporated herein and made a part of this ordinance (Figure 1, Overlay District Map).

b. *Street Classification:*

Additional parcels outside downtown Griffin may achieve the Mixed Use Overlay district designation by application, according to procedures for zoning map amendments (rezoning). Applications must identify which Tier and Street Classification type most appropriately provides for the context of the proposed development.

i. Primary Streets: Hill Street from Overlay boundary to Chappell Street, Broad Street, Broadway Street;

ii. Secondary Streets: All other.

c. The Griffin Overlay District shall be divided into three (3) development categories:

i. *Neighborhood tier.* The intent of the neighborhood tier is to preserve the residential traditional neighborhood character, historic structures and uses while allowing office adaptive re-use for structures along a primary streets and mixed use, and commercial uses along the primary streets where the property is vacant or currently utilized for commercial purposes within the district. This neighborhood character shall be guided by residential architecture such as pitched roofs, smaller scale, fenestration, cornices, columns and other architectural features. The height in this district shall be compatible to residential structures.

a. *Tier summary.* The Neighborhood tier summary is provided in Figure 722.1. All development shall conform to the dimensions, design, and other standards identified within Figure 722.1. Where text differs from the figure, the text shall control.

ii. *Village tier.* The intent of the village tier is to revitalize the downtown core in conjunction with the Historic District and create a well-defined, integrated core area for the downtown Griffin area. Vertical mixed use type development with commercial, residential, and office uses is encouraged to help enhance the downtown character. The urban character of this district shall be guided by zero setbacks, urban design features, preservation of historic building and compatible massing, scale and architectural detailing.

a. *Tier summary.* The Village tier summary is provided in Figure 722.2. All development shall conform to the dimensions, design, and other standards identified within Figure 722.2. Where text differs from the figure, the text shall control.

iii. *Corridor tier.* The intent of the corridor tier is to encourage mixed use type development that creates a more aesthetically pleasing and pedestrian friendly environment. Commercial, office, residential, multi-family, vertical mixed use type developments are desired. The orientation of any development shall be toward the street, focused on the primary street (if one exists) and the secondary if no primary street exists; however access can be from the rear and historic structures shall be preserved.

a. *Tier summary.* The Corridor tier summary is provided in Figure 722.3. All development shall conform to the dimensions, design, and other standards identified within Figure 722.3. Where text differs from the figure, the text shall control.

d. The Planning and Development Services Director shall have the final authority to determine whether any property is located within the boundaries of the Griffin Overlay District and which tier the subject property falls under.

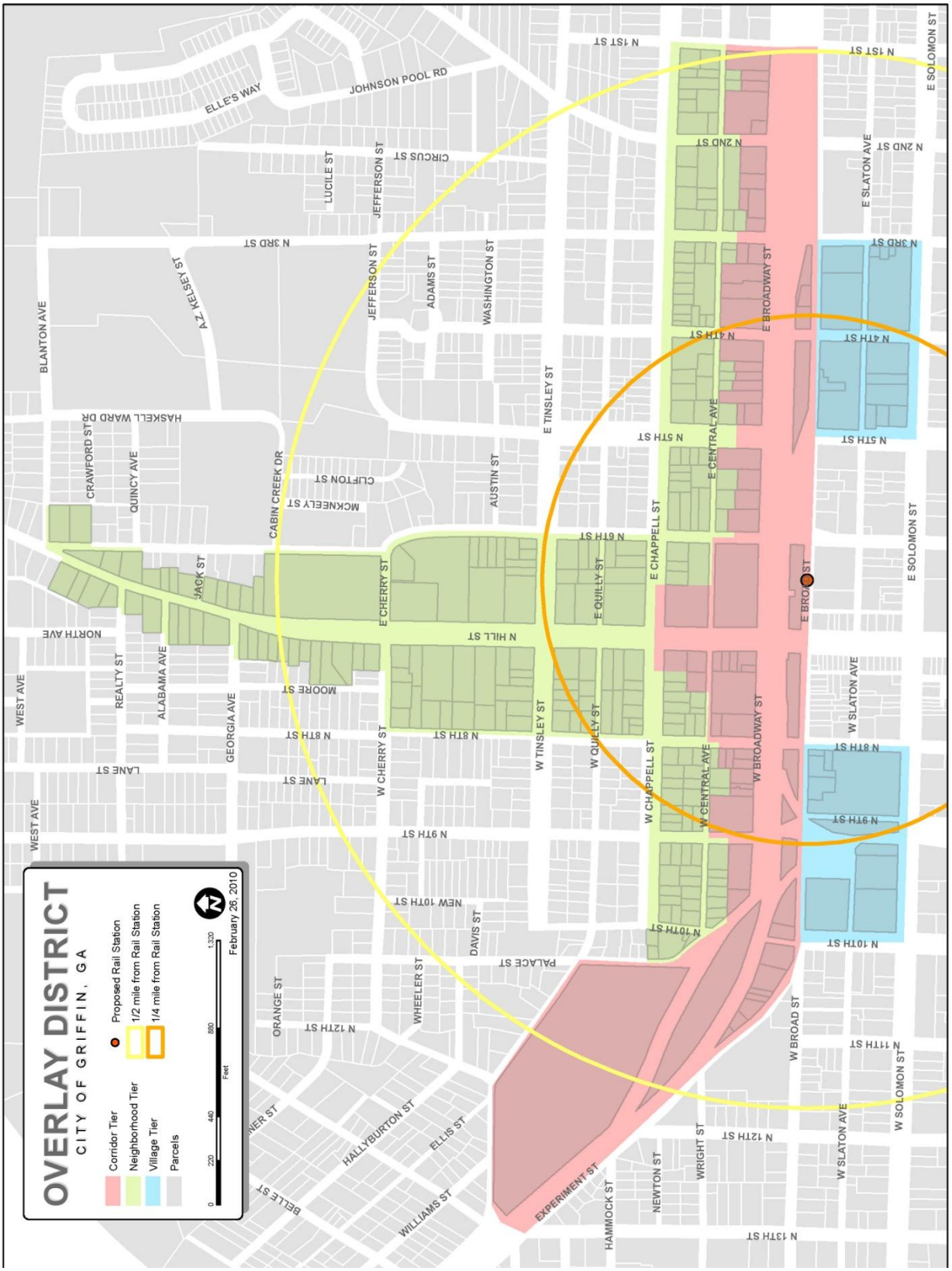

7.1 OVERLAY DISTRICT MAP

722 B. Review process/procedures.

The intent of this section is to guide new construction, rehabilitation/renovation of existing buildings to achieve compatibility between buildings and infrastructure and the preservation of contributing buildings.

1. Plans required: design review and certificate of compliance.

a. *Applicability:* No permit or license shall be issued within the Griffin Overlay District until the applicant for such a permit or license has submitted an application for design review, certificate of compliance, to the Planning and Services Development Department that meets all requirements of this ordinance and such application has been approved.

b. *Reviews.* Prior to the issuance of any land-disturbance permit, building permit, or sign permit, the applicant shall submit a conceptual design package and final design package to the Planning and Development Services Director. The plans will be forwarded to the Downtown Development Authority for review and comment as well as the Historic Preservation Commission, as applicable. The final design package must include full architectural and landscape architectural plans and specifications.

c. *Conceptual plan package review.* If the conceptual design package is deemed compliant and complete with no revisions required, it will be considered the Final Design Package**.** For parcels located outside the original Overlay boundary within Downtown Griffin, rezoning application packets shall also include conceptual site plans as described below. The conceptual plan package shall be composed of the following:

i. *Site Plan*:

Seven copies of a site plan drawn to a designated scale of not less than one inch equals one hundred feet, certified by a professional engineer or land surveyor licensed by the state, presented on a sheet having a maximum size of twenty-four inches by thirty-six inches, and one eight-and-one-half-inch by eleven-inch reduction of the plan. If presented on more than one sheet, match lines shall clearly indicate where the several sheets join. Such plan shall contain the following information:

a. Boundaries of the entire property proposed to be included in the development, with bearings and distances of the perimeter property lines;

b. Scale and north arrow, with north, to the extent feasible, oriented to the top of the site plan and on all supporting graphics;

c. Location, size and dimensions in length and width of all landscaped areas, transitional buffers, and open space;

d. Existing topography with a maximum contour interval of five (5) feet and a statement indicating whether it is an air survey or field run;

e. Delineation of any floodplain designated by the Federal Emergency Management Agency, United States Geological Survey, City of Griffin or Spalding County;

f. The delineation of any jurisdictional wetlands as defined by ordinance 404 of the Federal Clean Water Act;

g. Delineation of any significant historic or archeological feature, grave, object or structure marking a place of burial if known, and a statement indicating how the proposed development will impact it;

h. Delineation of all existing structures and whether they will be retained or demolished;

i. Location of all proposed uses, lots, buildings, building types and building entrances;

j. Height and setback of all buildings and structures;

k. Areas, lot sizes and development density for each type of proposed use;

l. Lot coverage percentages;

m. Open space percentages;

n. Location, size, and number of all on-street and off-street parking spaces, including a shared parking analysis, if shared parking is proposed;

o. Identification of site access points and layout, width of right-of-way and paved ordinances of all internal streets;

p. Conceptual plans for drainage with approximate location and estimated size of all proposed stormwater management facilities and a statement as to the type of facility proposed;

q. Areas to be held in joint ownership, common ownership, or common control;

r. Location of proposed sidewalks and bicycle facilities trails, recreation areas, parks, and other public or community uses, facilities, or structures on the site;

s. Conceptual layout of utilities and location of all existing or proposed utility easements having a width of ten feet or more;

t. Standard details of signs, sidewalks, streetlights, driveways, medians, curbs and gutters, landscaped areas, fencing, street furniture, bicycle lanes, streets, alleys, and other details demonstrating compliance with the Griffin Overlay District regulations;

u. Seal and signature of professional preparing the plan;

v. Photos of all surrounding properties including those across the street;

w. If in the historic district or a contributing building: Note what type of architectural approach and style will be taken.

ii. *Building Plan*:

Seven copies of conceptual building designs including elevation drawings drawn to a designated scale of not less than one-sixteenth inch equals one foot showing architectural details of proposed buildings, exterior materials, all of which demonstrate that the proposed design is in compliance with the requirements of the Griffin Overlay District regulations. Drawings shall be presented on a sheet having a maximum size of twenty-four inches by thirty-six inches, and one eight-and-one-half-inch by eleven-inch reduction of each sheet. If presented on more than one sheet, match lines shall clearly indicate where the several sheets join.

iii. *Written Statement:*

A written statement explaining how the proposed development will meet the standards of this ordinance. The written statement shall also include information describing the number of acres contained in the development; the number of dwelling units by type; the gross residential density; the area (in square feet) of any commercial uses; the common open space acreage; the anticipated number, type, and size of other public amenities; and the proposed legal mechanism for protecting and maintaining common open space, if applicable.

iv. *Multimodal Access:*

A multimodal access plan for projects over 0.5 acre, prepared at a scale not greater than one inch equals one hundred feet, to demonstrate a unified plan of continuous access to and between all structures in the proposed development and adjacent properties where connections are appropriate. The multimodal access plan shall cover the entire proposed development along with public rights-of-way of adjoining streets and any other property lying between the subject property and any primary or secondary streets. Safe and convenient pedestrian pathways shall be provided from sidewalks along streets to each structure entrance, including pedestrian access routes across parking lots and between adjacent buildings within the same development.

v. *Demolition Requests:*

In any case involving the demolition or partial demolition of a structure in the overlay district, before granting approval, the Planning and Development Services Director must determine whether the building is contributing or non-contributing and may call on the building official to provide them with a report on the state of repair and structural stability of the structure under consideration. The staff shall, in making such judgments, consider the results of any available historic properties and structures surveys or shall otherwise attempt to discern the structure's historic importance and whether or not the structure is considered contributing as defined by this ordinance. If a contributing structure, the applicant must provide a structural conditions report or letter produced by a licensed building inspector or engineer.

vi. *Public Art Plan:*

Seven copies of a Public Art Project Plan (new construction or substantial rehabilitation only) which shall include:

a. The required art investment, budget detailing applicable costs: artist's fees and expenses, costs for fabrication; installation, site preparation, structures to display artwork, plaque, and administrative costs; as outlined in Ordinance 722 Q: Public Art;
b. The artists being considered and the type of professional artist needed for this project;
c. Name of professional artist;
d. Developer goals for the project;
e. Concepts and ideas for the art project;
f. Location and visibility of proposed artwork;
g. Narrative description of proposed artwork;
h. Agreement between the developer and artist(s);
i. Scale site plan and landscape plan (for art location);
j. Scale drawing or model; and
k. Perspective view showing the proposed artwork in the development context.

Staff shall review the public art plan based on the following criteria:

a. Is the selected artwork produced by a professional artist? The staff will review such items as the person's educational background in the arts, arts accomplishments within the past five years such as gallery or museum exhibits, and the person's recognition by accepted arts organizations as an artist. The artist should be a practitioner in the visual arts, generally recognized by his or her critics and peers as a professional possessing serious artistic intent and ability;
b. Are the budget items and total amount acceptable to meet the minimum art investment for the development proposed?;
c. The staff will review the artwork plans and its placement in regard to the public visibility and enjoyment of the artwork; and
d. The content of the artwork is developer-selected; however, the staff will be interested in the durability, safety, placement and visibility of the exterior art project.

d. *Final design package review and approval process.*

i. Upon receiving comments on the conceptual plan package, the applicant will submit the final design package for review and approval unless exempted under 722.B.1.c. The final design package must include full architectural, site and landscape plans and specifications. The submitted plans must include:

a. Site plan;
b. Architectural elevations;
c. Renderings depicting the building design including elevations and architectural details of proposed buildings;
d. Exterior materials and colors;
e. Plans and elevations of all hardscape, landscape and signage, all of which shall demonstrate that the proposed design is in compliance with all requirements of this Griffin Overlay District and the underlying zoning classification.

ii. The applicant may submit the final design package simultaneously with the submission for permitting.

iii. Certificate of Compliance.

a. *Approval:* The Planning and Development Services Director or designee shall review each application for compliance with all requirements of the Griffin Overlay District and the underlying zoning classification. Where the Planning and Development Services Director determines that said plans comply with the requirements of the Griffin Overlay District a certificate of compliance shall be issued in the form of the Planning and Development Services Director signing the plans and drawings after which the applicant is approved for land disturbance, building or signs permits.

b. *Denial:* Where the Planning and Development Services Director determines that said plans do not comply with the requirements of this ordinance, then the Planning and Development Services Director shall notify the applicant in writing stating the manner in which said applicant fails to comply with such requirements. All applications shall be considered and decided within thirty (30) days of receipt of a complete application.

c. *Appeal:* Any appeal of the Planning and Development Services Director's decision in this regard shall be addressed to the Board of Commissioners.

722 C. Principal Uses and Structures.

The principal uses of land and structures which are allowed in the Griffin Overlay District are as provided by the underlying zoning district, subject to the limitations and standards contained within this ordinance. All properties zoned CBD (Central Business) District, PID (Planned Institutional) District, INST (Institutional) District, PCD (Planned Commercial) District, PRD (Planned Residential) District, MDR (Medium Density Residential) District, and LDR-C (Low Density Residential) District shall be used in accordance with the underlying zoning district or for the following principal uses of land and structures or a combination of uses in a mixed use development subject to the standards and limitations contained within this ordinance.

1. *Principal uses and structures.*

Table 7.3 shall govern the use of this zoning district, including permitted, prohibited, and conditional uses.

2. *Prohibited uses.*

The following principal uses of land and structures shall be prohibited within the Griffin Overlay District:

a. Two-family (Duplex) dwellings;

b. Manufactured homes;

c. Group homes for disabled persons, personal care homes and halfway houses;

d. Storage Structure for equipment and supplies in maintaining the principal building and grounds;

e. Commercial storage (mini-warehouses);

f. Commercial kennel;

g. Car wash;

h. Self-service storage facility;

i. Funeral home;

j. Any light industrial use which involves manufacturing, processing, assembly or storage operations where all operations are conducted entirely within a building;

k. Commercial Trade or Vocational School involved in any industrial training (such as car repair, large vehicle repair, welding etc);

l. Warehouse;

m. Rental or retail business involving the rental or sale of heavy equipment;

n. Off street loading facilities;

o. Central trash collection dumpsters;

p. Completely enclosed building for the storage of supplies, stock, merchandise and equipment;

q. Repair, accessory structure or service facility incidental to the principal use;

r. The open, outside storage of building materials, junk, salvage and inoperative vehicles;

s. Convenience stores with gas pumps;

t. Laundromat, unless in conjunction with a mixed use or multi-family project;

u. Cemetery; and

v. Off-street parking located on a corner lot.

3. *Special uses.*

The following uses and structures shall be authorized only by permits of the type indicated:

a. Special administrative permit from the Board of Commissioners

i. Art shows, carnival rides, festivals, parades and special events of community interest.

ii. Outdoor recreation entertainment facilities.

iii. Grocery stores or other retail establishments over 15,000 square feet.

b. Special permit from the Board of Commissioners for the demolition of any building in the Griffin Overlay District which falls under the definition of contributing structure.

722 D. Development standards for new construction.

The following requirements shall apply to new structures or substantial rehabilitation in the Griffin Overlay District.

1. When blocks are subdivided by new streets, the maximum length of resulting new blocks shall be three hundred (300) linear feet.

2. The maximum curb radius at any intersection or curb cut is thirty (30) feet.

3. All parking shall be accessed via shared alleys or private drives.

4. No additional curb cuts shall be allowed on primary streets (Broad Street, Broadway Street, Hill Street) if the development is accessible by another street. If an existing block face on a primary street exceeds seven hundred (700) linear feet, then one (1) curb cut per seven hundred (700) linear feet is allowed. If a development is accessible from more than one (1) secondary street, the development shall be limited to one (1) curb cut per block face.

5. All curb cuts shall be a maximum of twenty-four (24) feet wide (must fulfill all City Requirements).

6. Common or joint driveways are encouraged and may be authorized by the Planning and Development Services Director.

7. Driveways must be perpendicular to the adjacent street. Circular and non-perpendicular driveways are prohibited.

8. For nonresidential purposes, the primary ground floor entrance to all buildings shall be clearly visible from the street, and shall face the street. If a building fronts more than one (1) public street, the primary entrance shall face the primary street or maybe orientated toward the corner.

9. Minimum space between buildings shall be zero (0) feet, but if the property is adjacent to an existing building with windows facing the side property line, the setback shall be twenty (20) feet from the lot boundary of the existing building.

10. Gates and security arms shall be prohibited from crossing any public street or sidewalk.

11. All utilities shall be located underground.

12. *100-year Floodplain:* No permanent structure shall be constructed within the boundary of the 100-year floodplain unless the structure meets minimum floodplain ordinance requirements as established in Chapter 50 – Floods of the Griffin Code of Ordinances.

722 E. Building height for new construction.

1. Within the Griffin Overlay District, there shall be three (3) development tiers for the purpose of establishing allowable building heights (See Figures 722.1, 722.2, and 722.3).

a. All buildings within the Griffin Overlay District shall be a minimum of two (2) stories tall and twenty-eight (28) feet in height except for single-family detached houses and commercial buildings in the neighborhood tier.

b. Single-family attached townhomes or live/work units in all of the development tiers shall not exceed three (3) stories or forty five (45) feet, whichever is less.

c. Buildings in the Corridor tier and Village tier shall be permitted to exceed the maximum building height limit established in Table 7.5 and Table 7.6 below based on bonuses. Mixed use buildings are permitted to use more than one of the bonuses established below up to the maximum established in Table 7.5 and Table 7.6. Other buildings can only employ one bonus option. Bonuses can be granted, provided the building meets one (1) or more of the following:

i. Buildings are permitted to add one (1) additional story if fifteen (15) percent of the total number of residential units within a development of fifteen (15) units or more are priced for "workforce housing" or moderate income households, as defined by HUD;

ii. Commercial, mixed use and multi-family developments are permitted to add one (1) additional story to each building on a given lot if a contiguous publicly accessible open space, not including on-street parking and public sidewalks along roadways, comprising at least fifteen (15) percent of the development, is provided; or

iii. Commercial, mixed use and multi-family buildings fronting Hill Street, Broad Street and Broadway Street are permitted to add one (1) additional story to the respective building if seventy-five (75) percent or more of the ground-floor space is used for retail or service commercial uses with storefronts oriented toward a public street.

iv. Exception: Height averaging shall be employed if the new development is located between two contributing buildings. The average height of all the buildings in one block shall be used.

d. The maximum building height with any combination of height bonuses listed above shall be dependent upon building use according to the charts below. Special land use permits and variances shall not alter or allow structures taller than the maximum building heights provided herein within the Griffin Overlay District:

i. Exception: A building up to eight (8) stories or 100 feet may be allowed by special permit by the Board of Commissioner but must employ a step-back design over five (5) stories which preserves the perception of the height from street level. The Planning and Zoning Board will review the special permit request based on:

a. Proximity to commuter rail station:

i. ½ mile: seven (7) stories or 90 feet

ii. ¼ mile: eight (8) stories or 100 feet

iii. Figure 722.3-A on the Mixed-Use Corridor Tier Summary shows the parcels within either a ½ mile or ¼ from the proposed commuter rail station. If a parcel is cut by the radius line the owner may request the maximum height allowed at that for the entire parcel. The Planning and Zoning Board has the right to approve or deny this request.

b. Other factors:

i. Distance from contributing buildings

ii. Approval of the increased height is consistent with the purpose and intent of this ordinance

iii. The increased height will not violate an established view corridor.

Table 7. 4 MU/TOD: Neighborhood Tier Building Height

Building Use	Max. Building Height	Max. Building Height with Bonuses
Single-Family Attached	3 stories or 45 feet *	No Bonus
Commercial	3 stories or 45 feet *	No Bonus
Multi-family	3 stories or 45 feet *	No Bonus
Mixed use	3 stories or 45 feet *	No Bonus
*** Whichever is less** **All projects are subject to height averaging if the project is adjacent to contributing buildings. All projects are subject to transitional height plane regulations.**		

Table 7. 5 MU/TOD: Village Tier Building Height

Building Use	Max. Building Height	Max. Building Height with Bonuses
Single-family Attached	3 stories or 45 feet *	No Bonus
Commercial	3 stories or 45 feet *	4 stories or 60 feet *
Multi-family	3 stories or 45 feet *	4 stories or 60 feet *
Mixed use	3 stories or 45 feet *	5 stories or 70 feet *
*** Whichever is less** **All projects are subject to height averaging if the project is adjacent to contributing buildings.**		

Table 7. 6 MU/TOD: Corridor Tier Building Height

Building Use	Max. Building Height	Max. Building Height with Bonuses
Single-family Attached	3 stories or 45 feet *	No Bonus
Commercial	4 stories or 60 feet *	5 stories or 70 feet *
Multi-family	4 stories or 60 feet *	5 stories or 70 feet *
Mixed use	4 stories or 60 feet *	6 stories or 80 feet *
*** Whichever is less** **All projects are subject to height averaging if the project is adjacent to contributing buildings.** **Note: Applicants can apply to the Board of Commissioners to request additional height in this Tier when transit options are available.**		

e. Transitional height planes. Where a lot on the external boundary of the Griffin Overlay District is used for nonresidential purposes and adjoins the boundary of any property outside the district that is zoned for any residential classification without an intervening street, height within the tier shall be limited as follows: No portion of any structure shall protrude through a height limiting plane beginning thirty-five (35) feet above the buildable area boundary nearest to the common residential district boundary and extending inward over the commercial subarea at an angle of forty-five (45) degrees. In addition, when a new development in the corridor tier abuts a property in the neighborhood tier used as residential, the transitional height plane shall apply.

722 F. Open space and landscape requirements for new construction.

1. Within the Griffin Overlay District, there shall be three (3) development tiers for the purpose of establishing required open space.

2. Open space shall be provided for new construction as follows:

Table 7. 7 MU/TOD: Open Space

Development Category	Minimum Percentage of Open Space (Site Acreage) *
Neighborhood Tier (Figure 722.1)	10%
Village Tier (Figure 722.2)	5%
Corridor Tier (Figure 722.3)	5%
***Works of art, fountains, and pools, landscape and garden area can meet up to 25% of this requirement.**	

a. Open spaces shall be at grade, surrounded by buildings or streetscape elements with a mix of active uses on the ground floor on at least one (1) side, face the public street, and be directly accessible from a public sidewalk along a street. Ground-floor active uses shall include primary entries and exits into the building and may include, but are not limited to, retail storefronts, professional office storefronts and/or the primary facade of residential buildings with direct entries and exits to multiple residential units.

b. Open spaces shall include appropriate landscaping, including shade trees.

i. At least one (1) shade tree must be provided within or directly adjacent to the open space for every two thousand (2,000) square feet of open space.

ii. Shade trees must be a minimum of three and one-half (3.5) inches in caliper measured twelve (12) inches above ground.

iii. Shall have a minimum mature height of thirty (30) feet and shall be limbed up to a minimum height of eight (8) feet.

c. Open spaces include front yards, planted areas, fountains, parks, plazas, trails, paths, and hardscape elements related to sidewalks and plazas and similar features which are located on private property.

d. Private courtyards and other private outdoor amenities shall be located at the interior of the block, behind buildings or on rooftops. Private courtyards and outdoor amenities shall not be counted toward the minimum other open space calculations that may increase maximum building heights.

e. All open spaces including buffers, setbacks, sidewalk clear zones in excess of the minimum requirements or installed by the applicant, sidewalk zones in excess of the minimum requirements or installed by the applicant, and open spaces shall be fully implemented prior to issuance of a certificate of occupancy for the primary development.

f. When a private property owner provides landscaping and the landscaping dies within one (1) year of installation, such landscaping shall be replaced within the earliest possible planting season.

g. Covenants or other legal arrangements shall specify ownership of all open spaces, the method of and responsibility for maintenance, taxes, and insurance, compulsory membership and assessment provisions, and shall be incorporated into legal instruments sufficient to ensure that the open space requirements of this ordinance are maintained.

h. 75% of open space provided on-site must be contiguous.

3. *Transitional buffer zone requirements.*

Where a lot on the external boundary of the Griffin Overlay District is used for nonresidential purposes and adjoins the boundary of any property outside the district that is zoned for any residential zoning classification, a transitional buffer zone of not less than fifteen (15) feet in width shall be provided and maintained in a natural state or so as to maintain an effective visual screen.

a. Said transitional buffer zone shall not be paved or otherwise covered with non-pervious surfaces.

b. Shall not be used for parking, loading, storage, or any other uses, except that portions of the transitional buffer zone may be utilized for installation of utilities when necessitated by the development, and when the applicant shows that the utilities cannot be located outside of the transitional buffer zone. Water detention ponds shall not be located within the transitional buffer zones.

c. No trees, other than dead or diseased trees, shall be removed from said transitional buffer zone, but additional trees and plant material may be added to the transitional buffer zone.

d. When a new development in the corridor tier abuts a property in the neighborhood tier used as residential, the transitional buffer shall apply.

4. *Landscape buffer requirements for new construction.*

There shall be the following landscape buffer requirements between buildings, structures, parking areas:

a. Landscape strips not less than five (5) feet in width shall be provided along all rear property lines. Parking lot landscape requirements will be discussed in section 722 R.

b. Ground cover shall also be provided in accordance with the Griffin Overlay Design Guidelines, as provided below, in order to protect tree roots and to prevent erosion. Ground cover shall consist of evergreen shrubs or groundcover plant material mulched with pine bark mulch, or other similar landscaping material.

c. Newly planted trees shall conform to the Griffin LCI Area Design Guidelines, and as provided below.

d. No tree shall be planted closer than three (3) feet from the street or sidewalk, and no closer than eight (8) feet from a fire hydrant, sign post, streetlight standard, utility pole, or similar structure.

e. Landscaping plant materials required to be provided along streets to meet the minimum requirements of this overlay district shall be selected from the following list of species. Plant materials provided in locations other than along streets, and plant materials provided along streets in excess of those required to meet this overlay district may be any species appropriate to the design and location subject to the approval of City Staff.

f. The following Canopy Trees shall be allowed:

- **i.** Zelkova;
- **ii.** Red Maple Species;
- **iii.** Ginkgo, male only;
- **iv.** Thornless Honey Locust: Inermis;
- **v.** Elm Species: Athena and Dynasty;
- **vi.** Oak Species: Darlington, Willow, White; and
- **vii.** Green Ash.

g. The following Understory Trees shall be allowed:

- **i.** Maples: Trident, Hedge, Chalk, Paperbark;
- **ii.** Chinese Fringe Tree;
- **iii.** Okame Cherry;
- **iv.** Aristocrat Pear;
- **v.** Golden Raintree;
- **vi.** Crepe Myrtle;
- **vii.** Ironwood; and
- **viii.** Treeform Holly Species.

h. The following Dwarf Shrubs shall be allowed:

- **i.** Dwarf Holly Species;
- **ii.** Dwarf Abelia Species;
- **iii.** Dwarf Nandina Species;
- **iv.** Dwarf Rose Species;
- **v.** Dwarf Gardenia Species;
- **vi.** Dwarf Cephalotaxus; and
- **vii.** Dwarf Hawthorne Species.

i. The following Groundcovers shall be allowed:

- **i.** Daylily Species;
- **ii.** Liriope Species;
- **iii.** Mondo Species;
- **iv.** Pashsandra Species;
- **v.** Hellaborus Species;
- **vi.** Hosta Species;
- **vii.** Asiatic Jasmine Species;
- **viii.** Crinum Species;
- **ix.** Evergreen Ferns; and
- **x.** Dwarf Juniper.

j. Perennials: Since the City of Griffin is known as the Iris City, the Iris should be used in planters and planting beds.

- **i.** Sedum Species;
- **ii.** Lantana;
- **iii.** Dianthus;
- **iv.** Lilies;

v. Geranium;
vi. Phlox;
vii. Dwarf Evergreen Grasses;
viii. Iris;
ix. Verbena;
x. Salvia Daises;
xi. Rudbeckie
xii. Rainlies;
xiii. Bulbs; and
xiv. Coneflowers.

722 G. Building setbacks and lot size: new construction by tier.

Intent: Downtown structures are traditionally located adjacent to sidewalks and neighboring buildings. Buildings located along sidewalks clearly define the street edge. This building placement also creates a pedestrian-friendly atmosphere that entices people to explore and invites them into the buildings.

1. Neighborhood tier.
   a. Non-residential and mixed-use buildings.
      i. Minimum lot size: none
      ii. Minimum setbacks:
         a. Front: zero
         b. Rear: 20 feet (may be zero feet if adjacent to a public or private alley)
         c. Side: zero (unless 722-D.9 applies)
      iii. Maximum setbacks:
         a. Front: 20 feet
         b. Side: 20 feet
      iv. All new buildings along a primary street are required to be placed on the edge of a ten-foot wide sidewalk, unless a public plaza, patio or courtyard area is incorporated into the site plan (See 722 N for sidewalk requirements).
      v. Buildings located on corner lots will be placed adjacent to sidewalks on the two sides of the building that face the public right-of-way.
   b. Single-family detached.
      i. Minimum lot size: 10,890
      ii. Minimum public road frontage: 60 feet
      iii. Minimum setbacks:
         a. Front: 20 feet, unless adjacent to contributing buildings in which case setback averaging is required
         b. Rear: 30 feet (may be zero feet if adjacent to a public or private alley)
         c. Side: 7.5 feet (15 feet between buildings)
         d. Minimum Driveway Length – 22 feet (except for units served by a private alley)
         e. Front yards shall be landscaped with the exception of terraces, porches, stoops and walkways, which may occupy a maximum of one-half of the front yard area.
   c. Single-family attached and multi-family.
      i. Minimum lot size: 20,000 square feet
      ii. Setbacks:
         a. Front: 5 (min.) – 15 (max.) feet (Residences may be built to the edge of the right-of-way if parking/garage located in the rear or detached)
         b. Rear (Minimum only): 40 feet
         c. Side (Minimum only): 15 feet

d. Front yards shall be landscaped with the exception of terraces, porches, stoops and walkways, which may occupy a maximum of one-half of the front yard area.

2. Village and Corridor tier.

a. All front setback shall be zero (0) feet, unless a design feature is incorporated not to exceed five (5) feet unless a park or plaza is proposed. Buildings shall be permitted to be set back from the public sidewalk to allow for building stoops, front porches, balconies or steps, a public space or public park, outdoor dining, outdoor merchandising, or landscaping that does not completely cover the facade of the building. All ground floor uses shall have a sidewalk along the street.

i. At no time shall the setback of buildings located south of Broadway Street be greater than the average of the current buildings on the block.

b. Buildings located on corner lots will be placed adjacent to sidewalks on the two sides of the building that face the public right-of-way.

i. Exception: Open space in the form of a plaza, landscape area, area for public art or other spaces meeting the intent of this ordinance. Parking is not allowed in this area.

c. The minimum side and rear setbacks shall be zero (0) feet except as provided in 722.D.9. The side of a building facing a public street shall be permitted to set back from a public sidewalk to allow for building stoops, front porches, balconies or steps, a public plaza or park, outdoor dining, outdoor merchandising, or landscaping that does not completely cover the facade of the building. All ground floor uses must have a sidewalk or clear hardscape pathway connecting the building entrance to the public sidewalk along the street.

d. All new buildings along a primary street, excluding residential, are required to be placed on the edge of a ten-foot wide sidewalk with a 5 foot grass strip, unless a public plaza, patio or courtyard area is incorporated into the site plan.

722 H. Architectural regulations by type for new construction.

1. *Standards for live-work units.*

a. All off-street parking shall be hidden behind or within individual units. Garages may not face the public street (excluding single-family homes).

b. The front entrance to each unit shall be at grade opening directly onto the public sidewalk or a public space adjacent to the public sidewalk (excludes single-family homes).

c. For single-family homes the entrance must be oriented towards the primary street. If there is not a primary street than the structure must be oriented toward the secondary street. The garage or parking must be located in the side or rear yard behind front façade of the building.

2. *Standards for commercial and vertical mixed-use buildings (VMU).*

a. Ground-floor commercial and retail uses shall have entrances at grade opening directly onto the public sidewalk or a public space adjacent to the public sidewalk.

b. All commercial, mixed use, public and civic buildings shall have an awning or canopy over a building entrance that abuts the public right-of-way:

i. Awning and canopies shall overhang the sidewalk on which the building fronts by a minimum of five (5) feet

ii. Canvas, vinyl and metal awnings are permitted

iii. Plastic and bubble awnings are prohibited

iv. Vertical support poles are prohibited

v. If illuminated, be lit internally so that the light system is encased or otherwise screened from public view.

c. A minimum of forty-five (45) percent of the ground-floor facade of VMU and commercial buildings shall be clear and untinted, transparent glass storefront

d. Pedestrian access shall be provided from parking behind buildings to the public sidewalk through the ground floor of the building or via sidewalks between buildings.

e. A principal building located on a corner lot shall provide a secondary entrance as well as fulfill the transparency requirements as required in 722.H.2.c.

f. Arcades and balconies are allowed to encroach into the public right-of –way.

g. ADA requirements shall be met.

h. Any commercial or mixed use building façade which faces a public street shall feature bulkheads.

i. Entrance doors and architraves shall be recessed between four (4) and eight (8) feet. No broken pediments shall be allowed.

j. Any commercial or mixed use building façade which faces a public street shall feature transoms over store windows.

k. Rear entrances for customer use shall architecturally mimic the primary entrance.

l. Buildings located on a corner lot where two public rights-of-way intersect shall orient the front entrance toward the corner of the lot. Corner entrances shall be pronounced to highlight the buildings orientation.

m. Door surrounds shall include a combination of sidelights, transoms, pediments or other decorative features. Each building shall provide two of the above or provide documentation of another architectural feature which is compatible with the building's architectural style.

n. Window surround treatment shall include a combination of sills, lintel, sash, segmental arch, jack arch, hoods or other decorative features. Each building shall provide two of the above or provide documentation of another architectural feature which is compatible with the building's architectural style.

o. Aluminum or metal windows can only be used in exceptionally designed modern style buildings if they are a minimum of four inches in width. Modern buildings shall be compatible with the massing, scale and site design of the surrounding properties.

p. Fenestration on the upper levels shall be symmetrical. Window and door arrangements shall be associated vertically.

q. Applicant must employ one of the following architectural techniques to differentiate the first floor from the rest of the building such as:

- **i.** Soldier course;
- **ii.** Beltcourse;
- **iii.** Cornice lines; or
- **iv.** Similar architectural detailing between the first floor and the rest of the building.

r. Buildings, longer than one hundred (100) continuous feet shall vary the cornice height and create variations in facades with changes in facade depth, materials, textures, colors, and/or window and door patterns to provide visual interest and prevent a massive imposing appearance. In addition, any commercial building with primary tenant spaces greater than 50,000 square feet shall be structurally designed to be easily divided into smaller tenant spaces.

s. Blank, unarticulated, street walls for commercial, public, mixed use and civic buildings are prohibited on any street frontage.

t. Roof structures visible from the public right of way may be sloped or flat.

- **i.** Sloped roofs shall be hip roofs of less than forty-five (45) degrees in pitch or gable roofs of at least thirty (30) degrees in pitch.
- **ii.** Sloped roofs shall have overhangs of at least twelve (12) inches on all sides and shall not exceed one hundred (100) feet in length without a change in plane.
- **iii.** Roofing materials for sloped roofs shall one or more of the following: asphalt or fiberglass shingles, solar shingles used with asphalt or fiberglass shingles, standing seam metal roof, ceramic tile, and slate or synthetic slate.
- **iv.** Flat roofs shall have decorative and/or corbelled parapets on all sides visible from public rights of way and drain to internal roof drains and/or to the rear of the structure, prohibiting downspouts on facades along primary and secondary streets.
- **v.** Simple barrel vaults or roofs are allowable.

vi. Mansard and gambrel roof forms are prohibited.

3. *Standards for multi-family buildings.*
   a. Ground-floor residential units that face the street shall have entrances with a stoop or porch between the sidewalk and the building facade. A sidewalk shall connect all ground floor entrances to the public sidewalk;
   b. Multi-family buildings with no commercial component shall be set back between five (5) and fifteen (15) feet from the back of the sidewalk.
      i. The area between the sidewalk and the building facade shall contain only steps, front porches or stoops, balconies, or landscaping.
      ii. Mechanical equipment and other building service items may not be located within the setback area between the public sidewalk and building facade.
      iii. All mechanical equipment and other building service items must be placed in the rear yard and screened.
   c. Buildings, longer than one hundred (100) continuous feet shall vary the cornice height and create variations in facades with changes in facade depth, materials, textures, colors, and/or window and door patterns to provide visual interest and prevent a massive imposing appearance;
   d. Door surrounds shall include a combination of sidelights, transoms, pediments or other decorative features. Each building shall provide two of the above or provide documentation of another architectural feature which is compatible with the building's architectural style;
   e. Window surround treatment shall include a combination of sills, lintel, sash, segmental arch, jack arch, hoods or other decorative features. Each building shall provide two of the above or provide documentation of another architectural feature which is compatible with the building's architectural style; and
   f. Applicant must employ one of the following architectural techniques to differentiate the first floor from the rest of the building such as:
      i. Soldier course;
      ii. Beltcourse;
      iii. Cornice lines; or
      iv. Similar architectural detailing between the first floor and the rest of the building.
4. *Standards for single-family buildings - neighborhood tier.*
   a. All new single-family homes will utilize setback averaging to determine the appropriate building siting and height. The building shall be within 10% of the average (less or greater).
   b. Each new building shall be substantially similar to the architectural style of the block.
   c. Each new building should be a product of its own time but shall incorporate three of the following architectural elements compatible with the surrounding area or block:
      i. Compatible materials (wood or brick);
      ii. Window casements;
      iii. Window style;
      iv. Window fenestration;
      v. Door casement;
      vi. Door style;
      vii. Corner boards;
      viii. Return cornices;
      ix. Decorative gables;
      x. Decorative fretwork;
      xi. Porch;
      xii. Roofline;
      xiii. Other decorative detailing.

722 I. Architectural regulations by type for new construction.

1. Allowable primary exterior building materials shall account for at least 80% of the building and shall include brick, stone, wood, architectural metal siding, and fiber cement siding. The following building materials shall be prohibited: vinyl siding, exposed concrete block or concrete masonry units, exposed plywood, plastic or PVC, and synthetic stucco or EIFS.
2. Allowable secondary materials shall account for at most 20% of the building, be concentrated in areas such as trim, and include all allowable materials above as well as stucco and exposed concrete.
3. No more than three materials shall be used on a standalone building or unit in an attached building configuration. The lighter material must be placed vertically higher than the heavier material. Example: stack stone - bottom, fiber cement siding - top.
4. Wood muntins and mullions shall be used; vinyl is not permitted. Muntins and mullions must be either TDL (true divided light windows) or be placed on both sides of the window pane.
5. Shutters shall be operable or appear to be operable (cover the windows).
6. Employ compatible architectural elements.
7. The following architectural styles are prohibited:
   a. A-frame structures;
   b. Dome structures;
   c. Mediterranean motifs;
   d. Tudor or mock Tudor styles;
   e. Swiss chalet or Tyrolean motifs;
   f. Colonial;
   g. Standard prefabricated corporate/business structures, such as, but not limited to, metal, corporate colored gasoline island canopies and building facades, typically found in other areas unless specifically found to be compatible with these requirements; and
   h. The use of same template or repetitive architecture within the same large scale building and/or the mere copying of adjacent building architecture or form.

722 J. Mechanical and service areas (applicable for all development).

Service areas, trash dumpsters, trash compactors and all other mechanical areas and equipment shall be screened from view from all streets and public rights-of-way. Screening shall be permitted to include landscaping and/or architectural treatment of color similar to the building, to screen the equipment. If placed on the roof of a building, the mechanical systems shall be placed where not visible from the public right-of-way or blocked by a parapet.

1. *Dumpsters.*
   a. All dumpsters/ trash containment facilities must be located in the rear yard;
   b. All dumpsters enclosures must be three sides brick or wood, finished side facing outward, with solid metal or wood gates on the front side;
   c. The enclosure should be eight (8) feet tall or two (2) feet taller than the highest point of the grease containers, compactors or dumpsters, whichever is greater; and
   d. Recycling receptacles must be screened from public view by landscaping or decorative fencing.
2. *Fencing.*
   a. Decorative fencing shall only be made of brick, stone, wrought iron, or wood.
   b. Fencing in the front yard of any property shall not be higher than four (4) feet;
   c. Fencing to the rear or side of a building shall not be higher than six (6) feet; and
   d. No barbed wire, razor wire, chain-link fence or similar elements shall be visible from any public plaza, ground level or sidewalk level outdoor dining area or public right-of-way.
3. *Loading areas.*
   a. Loading areas should not face a public street; and

b. Loading dock entrances shall be screened so that the loading docks and related activities are not visible from the public right of way.

722 K. Approved paint colors (applicable for all development).

1. Paint distribution definitions:
- **a.** Base Color: Used for the majority of the building surface including wall surfaces, storefront piers, cornice (when the same material);
- **b.** Major Trim Color: Cornice, window hoods, window frames, storefront cornice, storefront columns, storefront bulkheads;
- **c.** Minor Trim Color: Window sash, doors;
- **d.** Accent Color: Used on signs, awnings, small details on window hoods, cornice, columns and bulkheads.

2. Paint Color Distribution.
- **a.** The applicant shall be compatible or utilize colors on the surrounding contributing buildings as long as the color complies with Table 7.8.

Permitted colors are as listed in Table 7.8. Glass and natural stones that are not painted are excluded from the color requirements. All whites, grays and blacks are allowed. Staff shall compare the colors below with the applicant's submittal.

Table 7. 8 MU/TOD: Permitted Colors

Base Colors	Major, Minor and Accent Colors
400U through 403U	5467C
406U through 409U	553C
413U and 414U	5535C
Browns, Beiges and Tans	5605C
462C to 468C	5743C
4625C to 4685C	1545U
469C, 474C, 475C	161U
4695C to 4755C	175U
478C, 719C to 724C, 725C to 731C, 476U to 482U	295U and 296U
719U to 725U	343U
726U to 732U	349U and 350U
Reds	Warm Grey 9U, 10U and 11U
168C, 181C	Black 2U through 7U
483C, 484C	4625U
1685C, 4975C	476U, 477U and 478U
Red-Browns	553U
154U, 1395U	5535U
1405U	730U and 731U
434U, 435U and 436U	7483U and 7484U
Warm Grey 1U through 5U	7503U, 7504U and 7505U
Warm Grey 6U, 7U and 8U	7517U, 7518U and 7519U
Cool Grey 1U through 4U	7530U, 7531U and 7532U
454U	871U through 875U
4545U	8003U and 8021U
467U and 468U	Grey
4655U, 4665U, 4675U and 4685U	429U to 433 U
4735U, 4745U and 4755U	443U to 447 U
480U, 481U and 482U	Warm Grey 6U-11U
4645U, 4655U and 4665U	Cool Grey 6U-11U
5855U, 5865U and 5875U	5467U to 5527U
649U and 650U	Grey-Blue
719U and 720U	5395U to 5455U
726U and 727U	621U to 627U
7407U	642U to 644U
7499U through 7502U	647U to 650U

7506U 7527U, 7528U and 7529U 7534U, 7535U and 7536U	654U to 656U Green-Grey 5605U to 5665U Greens 555U to 559U 560 C 614 C to 616 C 5467 C to 5527 C 5535U to 5595U

722 L. Existing buildings.

The City of Griffin has a variety and critical mass of contributing buildings which create a sense of place and identity. For this reason, it is important to preserve and restore those remaining contributing buildings that reflect the city's history, character and architecture.

1. *Standards for existing buildings.*

Buildings being renovated or rehabilitated (exterior only), or buildings falling under the category of substantial rehabilitation, that are less than 50 years old and considered non-contributing, shall conform to the design standards outlined for new construction in sections 722 D to 722 K. Buildings, contributing or noncontributing, or that were constructed less than 50 years ago but are not considered a substantial rehabilitation and undergoing renovations, shall conform the requirements established in this section of the ordinance and maintain compatibility with older adjacent buildings.

a. Buildings being renovated or rehabilitated, which are over 50 years old or which are eligible for listing in the Georgia Register of Historic Places or considered contributing should follow the following standards:

i. Respect the original character of the building;

ii. Preserve and repair original materials;

iii. Uncover intact facades that have had false fronts added;

iv. Preserve and restore original storefronts including: recessed entries, display areas, kick plates and transoms;

v. Maintain a building "edge" at the sidewalk or in line with the other adjacent buildings;

vi. Preserve and restore the size and shape of upper story windows; and

vii. Preserve and restore the original roof forms.

2. *Site design standards*.

a. Building Facades.

i. Contributing buildings shall maintain original appearance and design character.

ii. Contributing building shall maintain the design elements of the building and respect the original character of the building including, but not limited to the following elements:

a. Cornice or building cap;

b. Upper facade windows;

c. Lower facade composed of mostly glass and recessed entry;

d. Architectural details; and

e. Materials.

iii. Non-contributing buildings are allowed to maintain their current design but shall conform to the above regulations for any changes.

3. *Height of buildings.*

a. Contributing buildings shall maintain original height and roof design; and

b. Non-contributing building shall maintain their existing height or be compatible with the surrounding contributing building but are not allowed to exceed the substantial rehabilitation threshold and still fall under this section.

4. *Setback of buildings*.

a. New building additions to buildings shall conform to the established setback line of the other buildings on the street; and

b. New building additions shall comply with the zoning ordinance setback requirements unless they are in conflict with this ordinance or a variance is obtained.

5. *Parking.*

a. Existing buildings, at the adoption of this ordinance may continue to provide their current parking spaces without meeting new requirements;

b. Parking in front of buildings is prohibited unless it is on-street parking;

c. Multiple curb cuts for parking are prohibited;

d. Landscaping in and around parking lots is required in Ordinance 519.18 B., unless only on-street parking is provided.

6. *Architectural design standards.*

a. Roof, Window & Door Openings.

i. Roofs shall maintain their original appearance. If a change is necessary it shall conform to the rooflines of neighboring buildings;

ii. Original windows and doors shall be maintained, as feasible;

iii. Commercial or mixed use building doors shall be composed mostly of glass and recessed into the building;

iv. Storefront windows shall be primarily of glass and fit original openings;

v. If a glass window is not feasible, the window area shall be developed in a manner that provides interest to pedestrians, such as with a decorative wall sculpture or display area.

7. *Building materials.*

a. Contributing buildings shall maintain original materials where feasible;

b. Buildings less than 50 years old and considered non-contributing shall conform to materials approved in section 722 H such as brick, stone, clapboard or other appropriate materials.

8. *Lighting.*

a. Outdoor lighting shall be provided through both public and private lighting fixtures in conformance with the Griffin LCI Area Design Guidelines;

b. Lighting shall be used in the storefront display window, around signage, entrance and as an accent for building details.

722 M. General maintenance (applicable to all development).

1. Each building owner is required to maintain all facades of the building. This includes areas of the structure which are not visible from the public right-of-way. Maintenance issues include, but are not limited, to the following:

a. Paint must be maintained;

b. Windows must be maintained, no boarded up windows shall be allowed.

c. Any new downtown alley must be paved with pavers to match the existing historic pattern;

d. Mechanical units shall not be located in the alleys unless screened. Elevate the units 10 feet off the ground and house them in a structurally sound metal structure (see also building code);

e. No mechanical units shall block vehicular or pedestrian flow;

f. The rear of each building shall feature a light fixture.

722 N. Streets and sidewalks (applicable to all development)

1. All streets within the Griffin Overlay District shall meet city standards.

2. Streets shall be designed to create an interconnected system of grid-patterned roads, modified only to accommodate topographical conditions. See section 722 D for additional block size requirements.
3. Pedestrian zones in the Corridor tier and along primary streets in the Neighborhood tier:
   a. Shall consist of a landscape/buffer zone and sidewalk clear zone.
   b. The village tier consists of a sidewalk zone only.
   c. If the above conditions are not provided, the applicant must comply and complete any construction required prior to Certificate of Occupancy.
   d. Landscape zones shall be planted with trees, grass, ground cover or flowering plants, or consist of brick pavers or granite pavers where on-street parking is provided or pedestrian crossing and/or congregation is likely.
   e. The intent of this ordinance in the Neighborhood and Corridor zone is to provide for a ten-foot-wide pedestrian zone with a five-foot-wide landscape/buffer zone measured from the back of the adjacent street curb and a ten-foot-wide sidewalk zone in the neighborhood and corridor zone. However, right-of-way variations and the current conditions may not provide for a uniform application of this requirement. As such, the Planning and Development Services Department in consultation with the director of public works shall determine allowable adjustments on a case by case basis.
4. All sidewalk paving materials shall be continued across any intervening driveway at the same prevailing grade and cross slope as on the adjacent pedestrian sidewalk area with all driveway crossings meeting ADA standards.
5. Brick sidewalk clear zones paved with materials other than concrete or brick that are consistent in color with concrete or brick sidewalks may be allowed with the approval of the Planning and Development Services Director.
6. Sidewalk zones shall be herring-bone patterns, basket weave or jack over jack running bond and kept clear and unobstructed for the safe and convenient use of pedestrians.
7. Where newly constructed sidewalks abut existing sidewalks, the newly constructed sidewalk shall provide safe facilitation, including tapering or expansion of widths, for pedestrian traffic flow to adjacent sidewalks. Any development that disturbs existing sidewalks on the adjacent property shall replace disturbed areas to their pre-disturbance state and condition.
8. Safe and convenient pedestrian pathways shall be provided from sidewalks along streets to each structure entrance, including pedestrian access routes to parking decks and through parking lots and between adjacent buildings where applicable given side setbacks, within the same development. All such pathways shall be concrete and a minimum width of five (5) feet.

Table 7. 9 MU/TOD: Streets and Sidewalks

Tier	Street	Light Pole Spacing	Landscape Zone	Sidewalk Clear Zone
Neighborhood (Figure 722.1-H)	Primary	90 ft	Possible red brick- See Streetscape project	10 ft
	Secondary	60 ft(or as currently spaced)	5 ft	5-6 ft
Village (Figure 722.2-H)	Primary	60 ft	None	8 ft
	Secondary	60 ft	None	8 ft
Corridor* (may be impacted by grant installation) (Figure 722.3-H)	Primary	90 ft	5 ft	10 ft
	Secondary	60 ft	5 ft	10 ft

722 O. Landscape zones (applicable to all development).

1. Street trees shall be planted in all landscape zones spaced at a maximum distance of thirty (30) feet on center.
2. New street trees must be a minimum of three and one-half (3.5) inches in caliper measured twelve (12) inches above ground, shall have a minimum mature height of thirty (30) feet and shall be limbed up to a minimum height of eight (8) feet.
3. Street trees shall have a minimum planting area of four (4) feet by eight (8) feet. Tree-planting areas shall provide porous drainage systems that allow for drainage of the planting area.
4. Street tree species shall be consistent for entire block lengths. Species shall be permitted to change on individual block face due only to limited supply and/or concerns regarding disease or the health of existing and proposed trees with approval from the Planning and Development Services Director and consultation from a certified arborist.
5. Any benches, trash receptacles, and bike racks shall be placed within the landscape zone on primary streets. If no landscape zone is provided, required to be provided or exists then the above referenced items shall be placed on the sidewalk. ADA requirements shall be fulfilled.

722 P. Streetscape elements (applicable to all development).

It is the intent of this ordinance to regulate all elements allowed along the street and sidewalk, including the landscape strips.

1. *Newspaper Boxes.*
   - **a.** No more than three per block face;
   - **b.** No mid block news boxes shall be allowed on blocks measuring less than 350 feet;
   - **c.** Installation (no less than):
     - **i.** Three (3) feet from a curb edge;
     - **ii.** Two (2) feet from a driveway;
     - **iii.** Five (5) feet from a fire hydrant;
     - **iv.** Three (3) feet from a traffic signal, utility pole, decorative street light pole, or tree; and
     - **v.** Must be painted black or another color which is compatible with the decorative street lights, street furniture or other public feature.
2. *Post Drop Boxes* (does not apply to free paper/advertisement circulation)
   - **a.** Shall not exceed three per parking lot;
   - **b.** Shall be located in the planting bed/landscape strip closest to the entrance/exit;
   - **c.** Shall be no more than 8 inches from the curb; and
   - **d.** Shall be permanently affixed to the ground.
3. No permanent structures are allowed in the landscape strip except for the following:
   - **a.** Identification signage;
   - **b.** Light posts; and
   - **c.** Items in section 722 O and 722 P.

722 Q. Public Art for New Construction or Substantial Rehabilitation

1. Developers of any new professional office, lodging projects, retail, service, commercial, wholesale, transportation, or expansion projects and multi-family projects with five or more dwelling units within the Griffin Overlay District are required to provide public artwork.
   - **a.** The public art must have an invoiced cost or appraised value equal to one percent of the cost of building construction, including associated site work , signage, and water features (encouraged to use recycled water);
   - **b.** As an alternative to providing public art, developers may contribute to a dedicated fund established by the City of Griffin for these improvements; the dollar amount shall be an amount equal to a minimum of 1% of the cost of building construction and associated site work and signage.

i. If a developer chooses to contribute the required art investment to the City of Griffin, monies must be deposited in order to receive approval for the Certificate of Occupancy. If requested, the City staff will work closely with the developer to identify an appropriate use of the contribution that will benefit both the developer and the city.

c. The public art requirement must be met prior to the issuance of a Certificate of Occupancy. The art contribution should be approved by City Staff as being in compliance with the ordinance. Approved artwork must be installed in accordance with approved construction and landscape plans. Artwork selected by the developer must be integrated with the project must be located on an exterior of the structure or the building site, be visible to the public; and

d. Acceptable forms of art include the following:

i. All forms of limited edition or one-of-a-kind original creations of visual art created by an artist;

ii. Project features and enhancements which are unique and produced by a professional artist such as benches and fountains;

iii. Murals or mosaics covering walls;

iv. Professional artist sculptures which can be freestanding, wall-supported or suspended and made of durable materials suitable to the site and the climate; and

v. Other suitable artworks as presented in a catalogue and previously approved by City Staff/Board of Commissioners.

e. The location of the artwork should be in an outdoor location. Approved sites are:

i. City owned property, including rights-of-way, parks;

ii. City Hall complex; and

iii. Subject site.

Note: A plaque shall be placed at the approved location identifying the artist and date of installation.

f. Non-acceptable works of art:

i. Business logos or art that incorporates a logo;

ii. Directional elements such as signage or color coding except where these elements are integral parts of the original works of art;

iii. Mass-produced art objects, such as fountains, statuary objects, or playground equipment;

iv. Reproduction by mechanical or other means of original works of art;

v. Decorative ornamental or functional elements created by the project architect instead of an artist commissioned for this purpose;

vi. Landscape architecture or gardening except for elements designed by the artist as an integral part of the work of art;

vii. Electrical, water or mechanical service for activation of the works of art;

viii. Art exhibitions and educational activities;

ix. Security and publicity concerning works of art; and

x. Standard landscape or hardscape elements which would normally be associated with the project.

g. Eligible costs for artworks.

When preparing a budget for the artwork, certain costs may be included to meet the developer's required art investment:

i. Professional artist's budget, including artist fees, materials, assistants' labor costs, insurance, permits, taxes, business and legal expenses, operating costs and art dealer's fees if such fees are necessary and reasonable;

ii. Fabrication and installation of the artwork, including base and/or foundation if necessary;

iii. Site preparation for artwork;

iv. Structures enabling the artist to display the artwork;
v. Documentation of the artwork; and
vi. Acknowledgment plaque identifying the artist, artwork and development.

h. Development responsibility after installation.
i. Art located on the subject site will remain the owner's property, subject to a covenant on the part of the developer that the piece will remain in public view. It will be the property owner's responsibility to insure and maintain the piece of art. The insured value must equal the appraised value.
ii. Art located on City-owned property shall be dedicated to the City. The final location will be reviewed by the City to ensure compliance with American with Disabilities Act (ADA), if applicable, and to minimize conflicts with public utilities in City rights-of-way. The City will be responsible for maintaining all pieces on City-owned property.

i. Development projects not subject to public art contribution.
The requirements of this Chapter shall not apply to the following:
i. Tenant improvement projects;
ii. Building additions;
iii. Remodeling, repair or reconstruction of an existing structure;
iv. 100% low-income housing projects;
v. Nonprofit agencies and institutions that exclusively provide social services only to the general public, upon approval of the Board of Commissioners; and
vi. Condominium conversion projects.

722 R. Parking.

On-street parking spaces shall be counted toward total parking requirements.

1. Off-street parking requirements for uses and structures are authorized and permitted, as follows:
a. Residential.
i. *Single-family detached.* One (1) space minimum, two (2) spaces maximum.
ii. *Single-family attached.* One (1) space minimum, two (2) spaces maximum.
iii. *Multi-family.* One (1) space per dwelling unit minimum for one bedroom, two (2) spaces per dwelling unit (Minimum and Maximum).

b. Commercial.
One (1) parking space for every four hundred (400) square feet of gross building area (minimum and maximum).

c. Retail.
One (1) parking space for every three hundred (300) square feet of gross building area (minimum and maximum).

d. Other uses.
One (1) parking space for every three hundred (300) square feet of gross building area (Minimum and Maximum).

e. An applicant may apply for a 25% increase from the maximum parking allowance. The additional parking must be constructed with a pervious/porous surface such as grasscrete or other approved materials. The materials shall be submitted to the Planning and Development Services Director.

f. Shared parking is encouraged and may result in permitted reductions of off-street parking requirements. Parking facilities within a lot may be shared if multiple uses cooperatively establish and operate parking facilities and if these uses generate parking demands primarily when the remaining uses are not in operation.
i. Applicants shall make an application to the Planning and Development Services Director for authorization for shared parking.
a. Applicants shall include proof of a written formal shared-parking agreement between the applicant and all affected property owners;

b. Required parking for residential units shall be prohibited from being shared;

c. A to-scale site plan indicating location of proposed parking spaces shall be provided;

d. A shared parking calculation projection shall be provided that demonstrates that each use will have adequate parking provisions at all times;

e. For contiguous properties sharing parking spaces under this provision, cross-easements shall be filed establishing access to the parking spaces in perpetuity;

f. A reduction in the number of parking spaces that would otherwise be required for each of the various uses on a multiple-use property must be clearly shown on the development plan. If shared parking is proposed for a combination of contiguous properties, a plan must be submitted covering all of the properties that will be sharing the parking spaces;

g. *Location on other property:* If the required automobile parking spaces cannot be reasonably provided on the same lot on which the principal use is conducted, such spaces may be provided on adjacent or nearby property, provided a major portion lies within 1,000 feet of the main entrance to the principal use for which such parking is provided, and measured by the most direct route of travel on the ground;

ii. Failure to meet the required parking space requirements at any time renders building occupancy permit or business license;

iii. Required residential parking shall be segregated from parking for all other uses with the exception of additional parking provided for live/work single-family units; and

g. Each development which provides automobile parking facilities shall provide bicycle parking facilities in adjacent parking structures, parking lots, or the landscape zone of the adjoining sidewalk. Nonresidential developments shall provide bicycle parking at a ratio of one (1) bicycle parking space for every twenty (20) vehicular spaces. Multi-family residential developments shall provide bicycle parking facilities at a minimum ratio of one (1) bicycle parking space for every five (5) multi-family units. No development shall have fewer than three (3) bicycle parking spaces nor be required to exceed a maximum of fifty (50) bicycle parking spaces.

h. Parking reductions by right.

i. Senior Housing units are allowed to provide only 0.5 spaces for each unit.

ii. TOD Provisions: Within 1500 feet of MARTA or another mass transit station, when constructed, has a 50% reduction in the parking requirements.

2. Parking design.

a. All off-street parking including surface lots and parking decks shall be located behind or beside buildings. If parking is located to the side of the building a vegetative screen (appropriate landscaping materials in Ordinance 722.F.4) of at least 3 feet in height or a screen constructed out of the same material as the adjoining building shall be provided except where driveways, bicycle and pedestrian walkways are required. The parking lot shall adhere to the same setbacks as the adjoining buildings;

b. No parking lot shall be placed between the public right of way and an intervening building unless the lot is placed behind the rear wall of the primary building sixty (60) feet back and screened;

c. Wheel stops or bumpers shall be placed at the head of all off-street parking spaces that abut a landscape strip or sidewalk;

d. Header curbs (Squared Edge design) are required for all parking lots;

e. Landscape Islands**:**

i. All surface parking lots of fifteen (15) parking spaces or more must include landscaping in the form of shade trees within the confines of the surface parking lot;

ii. One shade tree and landscape island of at least 200 square feet must be provided for every ten (10) parking spaces;

iii. Shade trees shall be a minimum of three and one-half (3.5) inches in caliper measured twelve (12) inches above ground;

iv. Shade trees shall be a minimum of sixteen (16) feet in height;

v. Shade trees shall have a minimum mature height of thirty (30) feet; and

vi. Shade trees shall be limbed up to a minimum height of eight (8) feet.

vii. Each island shall be 100% landscaped with deciduous trees (4 caliper min), evergreen shrubs, canopy trees, understory trees, not to exceed three feet in height at maturity and ground cover (no mowing required) or flowers in mulched beds;

f. This applicant can submit an administrative variance to the Planning Development Services Director if the total landscape island square footage can be met but the location as defined by this section cannot.

i. The applicant must prove the hardship and show how the intent of the ordinance is being met (heat islands, run-off).

g. There shall be a six foot wide landscape island (back of curb to back of curb) at the end of each row of parking-equal in length to the adjoining parking space.

h. All parking lots should have a landscape buffer of 6 feet wide and three feet in height except where driveways, bicycle and pedestrian walkways are required.

i. Parking Decks**:**

i. Parking decks shall be located in the center of a building or site;

ii. If this is not possible, all parking structures shall have retail or service uses located on the ground floor or be designed in a manner that replicates the look;

iii. Street level openings on parking structures shall be limited to those necessary for store entrances, vehicle entrances and exit lanes, and pedestrian entrances to stairs and elevator lobbies;

iv. Tinted glass is prohibited;

v. No parking desk shall be higher than the adjoining building;

vi. Liner buildings shall be utilized to block parking decks whenever possible;

vii. All levels of the deck shall be or appear to be a building façade utilizing the material allowed in section 722 I;

viii. Parking decks shall conceal vehicles from view;

ix. Each deck shall incorporate the one or more of the following elements:

a. Recesses;

b. Projections;

c. Façade treatments; and

d. Planter boxes.

x. All parking decks and parking structures shall have pedestrian walkways a minimum with of five feet connecting ground level parking with public sidewalks and to all building entrances.

722 S. Signs

1. *Ground/monument signs.*

a. Shall have a base and framework made of brick or stone;

b. Prohibited in the village tier;

c. Maximum height: six (6) feet;

d. Maximum size:

i. Single retail, office or commercial tenant: thirty five (35) square feet;

ii. Multiple tenant, retail office or commercial: fifty (50) square feet.

2. *Wall signs main building.*

a. The combined area of any and all signage of any building or structure shall not exceed ten (10) percent of the main building facade.

3. *Individual wall signs painted directly on recessed panels on the building façade.*

a. Flat/attached or signs painted on building façade
   i. Maximum size: 25% of wall area

4. *Pole signs.*
   a. Allowed only in the Historic District and Village tier;
   b. Shall be "L" Shaped";
   c. Constructed of wrought iron or wood;
   d. Maximum Height: ten (10) feet in height and not overhang into the public right-of-way; and
   e. Maximum Size: sixteen (16) square feet.
5. *Projecting signs.*
   a. Mounted perpendicular to the building front;
   b. Maximum projection: three (3) feet;
   c. Minimum height: eight (8) feet;
   d. Placement: two (2) feet from ingress/egress; and
   e. Maximum Size: four (4) square feet.
6. *Sidewalk signs.*
   a. Maximum Height: 3'6";
   b. Maximum Size: six (6) feet;
   c. Material: wood or metal;
   d. Temporary location: five (5) foot pedestrian access shall be maintained; and
   e. Maximum: One per business.
7. *Menu boxes.*
   a. Maximum Size: four (4) square feet; and
   b. Maximum: One per business.
8. *Dedication or historic preservation plaques.*
   a. Maximum Size: 10" X 12"; and
   b. Material: metal or wood.
9. *Relief signs.*
   a. Maximum Size: letter size two (2) feet in height;
   b. Maximum: One replaces wall sign allowance; and
   c. Location: Façade or awning.
10. *Prohibited signs.*
   a. Internally lit;
   b. Flashing, Blinking, and rotating signs; and
   c. Rood signs.

722 T. Lighting

1. *General.*
   a. Uplighting shall be required.
   b. Exterior lighting shall be low intensity and avoid spill over on adjacent properties
   c. Warm lighting colors such as incandescent, halogen, metal halide shall be required.
   d. A minimum footcandle of 0.5 at the perimeter and between light sources.
   e. A minimum footcandle of 5.0 under the light fixture.

722 U. Access

1. *Interparcel access.*

   To the maximum extent possible, sidewalks and parking lots serving adjacent lots shall be interconnected to provide continuous driveway connections and pedestrian connections between adjoining lots and streets, except that this requirement shall not apply to lots zoned for single-family residential development. Where necessary, Spalding County and the City of Griffin may require access easements be provided to ensure continuous access and egress routes connecting commercial, office and multi-family lots.

2. *Connections.*

a. Connections to available transportation modes, such as driveways, sidewalk, and bike paths shall be shown along adjacent streets and those entering adjoining properties.

b. Safe and convenient pedestrian ways shall be provided from sidewalks along streets to each building entrance, including pedestrian access routes across parking lots and between adjacent buildings within the same development.

c. Where an existing or planned mass transit stop is within one thousand two hundred fifty (1,250) feet (straight-line distance) from any boundary of the subject property, the access plan shall show how pedestrians may safely travel from such station or stop to the subject property, the access plan shall show how safe, continuous and convenient bicycle access shall be provided to the subject property.

d. All buildings surrounding a mass transit station must provide an entrance facing the station and a convenient pathway between the building and the transit station.

722 V. Design guidelines.

The Planning and Development Services Director is authorized to create and administer, design guidelines for the Griffin Overlay District. These standards shall provide acceptable architectural design controls, landscaping, detail drawings, signage, fencing, lighting, street and site furniture and grating. These standards shall be used to promote proper design criteria for the overlay district and shall guide the planning director in deciding whether a proposed design complies with the requirements of this overlay district. The Design Guidelines are hereby made a part of this ordinance and shall be amended from time to time.

722 W. Publically Accessible Open Space

1. *Legal mechanism.*

a. Each applicant shall present as a part of the application for a building permit within the Griffin Overlay District a legal mechanism under which all land to be used for publically accessible space purposes shall be maintained and protected. Such legal mechanism may include deed restrictions, property owner associations, common areas held in common ownership or control, maintenance easements, or other legal mechanisms, provided that said legal mechanism shall be approved by the county attorney as assuring each of the following mandatory requirements:

i. That all subsequent property owners within said Griffin Overlay District be placed on notice of this development restriction through the deed records of Spalding County Superior Court;

ii. That all public space held in common will be properly maintained and insured with no liability or maintenance responsibilities accruing to the city;

iii. That a legal mechanism exists for notice of deficiencies in maintenance of the public space held in common, correction of these deficiencies, and assessment and liens against the properties for the cost of the correction of these deficiencies by a third party or the city.

2. When an applicant chooses to utilize a property owners association in order to comply with the requirements of (a) above, the applicant, in addition to meeting all of said requirements, shall provide for all of the following:

a. Mandatory and automatic membership in the property owners' association as a requirement of property ownership;

b. A fair and uniform method of assessment for dues, maintenance and related costs;

c. Where appropriate, party wall maintenance and restoration in the event of damage or destruction; and

d. Continued maintenance of public space held in common and liability through the use of liens or other means in the case of default.

3. *Maintenance of common land.*

Covenants or other legal arrangements shall specify ownership of all public spaces, the method of and responsibility for maintenance, taxes and insurance, compulsory membership

and assessment provisions, and shall be incorporated into legal instruments sufficient to ensure that the public space requirements are maintained.

[Remainder of page intentionally left blank.]

[this page intentionally left blank]

[this page intentionally left blank]

[this page intentionally left blank]

723. CONSERVATION SUBDIVISION ZONING OVERLAY DISTRICT

723 A. Background.

Open space development has numerous environmental and community benefits, including:

1. Reduces the impervious cover in a development. Impervious cover contributes to degradation of water resources by increasing the volume of surface runoff, and preventing infiltration of rainfall into the soil surface.
2. Reduces pollutant loads to streams and other water resources.
3. Reduces potential pressure to encroach on resource buffer areas.
4. Reduces soil erosion potential by reducing the amount of clearing and grading on the site.
5. Preserves green space.
6. Preserves open space for recreation.
7. Reduces the capital cost of development.
8. Reduces the cost of stormwater management by concentrating runoff in one area and reducing runoff volumes.
9. Provides a wider range of feasible sites to locate stormwater BMPs.
10. Reduces the cost of future public services needed by the development.
11. Can increase future property values.
12. Creates urban wildlife habitat "islands."
13. Creates a sense of community and pedestrian movement.
14. Can support other community planning goals, such as farmland preservation, affordable housing, and architectural diversity.

723 B. Purposes.

The purpose this zoning district is to protect natural, historic and community resources within the City of Griffin by promoting open space development within our jurisdictions. It also aims to serve as a tool for water quality and watershed protection and to enhance the visual and esthetic value of land in the City of Griffin by providing for and promoting the development of residential subdivisions that conserve open space and integrate natural features into site design. Specifically, the district intends:

1. To provide for the preservation of greenspace as a nonstructural stormwater runoff and watershed protection measure.
2. To provide a residential zoning district that permits flexibility of design in order to promote environmentally sensitive and efficient uses of the land.
3. To preserve in perpetuity unique or sensitive natural resources such as groundwater, floodplains, wetlands, streams, steep slopes, woodlands and wildlife habitat.
4. To permit clustering of houses and structures on less environmentally sensitive soils which will reduce the amount of infrastructure, including paved surfaces and utility easements, necessary for residential development.
5. To reduce erosion and sedimentation by minimizing land disturbance and removal of vegetation in residential development.
6. To promote interconnected greenways and corridors throughout the community.
7. To promote contiguous greenspace with adjacent jurisdictions.
8. To encourage interaction in the community by clustering houses and orienting them closer to the street, providing public gathering places and encouraging use of parks and community facilities as focal points in the neighborhood.
9. To encourage street designs that reduce traffic speeds and reliance on main arteries.
10. To promote construction of convenient landscaped walking trails and bike paths both within the subdivision and connected to neighboring communities, businesses, and facilities to reduce reliance on automobiles.

11. To conserve scenic views and reduce perceived density by maximizing the number of houses with direct access to and views of open space.

12. To preserve important historic and archaeological sites.

723 C. General regulations.

1. *Applicability of Regulations.*

This Conservation Subdivision option is available in all residential zoning districts as a use by right. Applicant shall comply with all other provisions of the zoning code and all other applicable laws, except those that are incompatible with the provisions contained herein.

2. *Ownership of Development Site.*

The tract of land to be subdivided may be held in single and separate ownership or in multiple ownership. If held in multiple ownership, however, the site shall be developed according to a single plan with common authority and common responsibility.

3. *Housing Density.*

Overall density of the site may exceed the underlying zoning district, provided that it does not exceed six (6) units to the acre and that lot sizes vary in accordance with Section 723 C 5.a (iii) below.

4. *Housing Density Determination.*

The maximum number of lots in the Conservation Subdivision shall be determined by the following method:

a. Calculation: The maximum number of lots is determined by dividing the area of the tract of land by the minimum lot size specified in the underlying zoning. In making this calculation, the following shall not be included in the total area of the parcel:

i. slopes over twenty-five percent (25%) of at least 5,000 square feet contiguous area;

ii. the 100-year floodplain;

iii. bodies of open water over 5,000 square feet contiguous area;

iv. wetlands that meet the definition of the Army Corps of Engineers pursuant to the Clean Water Act; or

v. anticipated right-of-way needs for roads and utilities.

5. *Development Standards.*

a. To encourage conservation and the use of this district, design standards offer maximum flexibility, requiring only that:

i. lot sizes along the perimeter of the overall development are not smaller than twenty percent (20%) of the average size of lots in adjacent, existing residential lots;

ii. single family detached and townhome separation comply with building code footing distances; and

iii. a variety of lot sizes and residential types occur within the subdivision development, responding to the natural configurations on the site.

b. Waivers to parking standards, such as the provision for shared residential parking facilities, and other standards such as curb and pavement materials may be proposed on a site plan and application for consideration and approval by the Public Works Director, provided they demonstrate how these variations meet the conservation purpose of this zoning district as defined herein. Such requests to vary from development standards must be explicit and cite the applicable code section.

6. *100-year Floodplain.* No permanent structure shall be constructed within the boundary of the 100-year floodplain unless the structure meets minimum floodplain ordinance requirements as established in Chapter 50 – Floods of the Griffin Code of Ordinances.

723 D. Application requirements.

1. *Site analysis map required.*

Concurrent with the submission of a site concept plan, Applicant shall prepare and submit a site analysis map. The purpose of the site analysis map is to ensure that the important site features have been adequately identified prior to the creation of the site design, and that

the proposed Open Space will meet the requirements of this article. The preliminary site plan shall include the following features:

a. Property boundaries;

b. All streams, rivers, lakes, wetlands and other hydrologic features;

c. Topographic contours of no less than ten (10) foot intervals;

d. All Primary and Secondary Conservation Areas labeled by type, as described in Section 723 E of this section;

e. General vegetation characteristics;

f. General soil types;

g. The planned location of protected Open Space;

h. Existing roads and structures; and,

i. Potential connections with existing greenspace and trails.

2. *Open space management plan required.*

An open space management plan, as described in Section 723 E, shall be prepared and submitted prior to the issuance of a land disturbance permit.

3. *Instrument of permanent protection required.*

An instrument of permanent protection, such as a conservation easement or permanent restrictive covenant and as described in Section 723 E, shall be placed on the Open Space concurrent with the issuance of a land disturbance permit.

4. *Other requirements.*

The Applicant shall adhere to all other applicable requirements of the underlying zoning district and applicable sections of the Unified Development Code.

723 E. Open space.

1. *Definition.*

Open space is the portion of the conservation subdivision that has been set aside for permanent protection. Activities within the open space are restricted in perpetuity through the use of an approved legal instrument.

2. *Standards to determine open space.*

a. The minimum restricted open space shall comprise at least forty percent (40%) of the gross tract area.

b. The following are considered Primary Conservation Areas and are required to be included within the open space, unless the Applicant demonstrates that this provision would constitute an unusual hardship and be counter to the purposes of this article:

i. The regulatory 100-year floodplain;

ii. Buffer zones of at least 75-ft. width along all perennial and intermittent streams;

iii. Slopes above twenty-five percent (25%) of at least 5,000 square feet contiguous area;

iv. Wetlands that meet the definition used by the Army Corps of Engineers pursuant to the Clean Water Act;

v. Populations of endangered or threatened species, or habitat for such species; and,

vi. Archaeological sites, cemeteries and burial grounds

c. The following are considered Secondary Conservation Areas and should be included within the open space to the maximum extent feasible.

i. Important historic sites;

ii. Existing healthy, native forests of at least one acre contiguous area;

iii. Individual existing healthy trees greater than eight (8) inches caliper, as measured from their outermost drip line;

iv. Other significant natural features and scenic viewsheds such as ridge lines, peaks and rock outcroppings, particularly those that can be seen from public roads;

v. Prime agricultural lands of at least five acres contiguous area; and,

vi. Existing trails that connect the tract to neighboring areas.

d. Above-ground utility rights-of-way and small areas of impervious surface may be included within the protected open space but cannot be counted towards the forty percent (40%) minimum area requirement (exception: historic structures and existing trails may be counted). Large areas of impervious surface shall be excluded from the open space.

e. At least seventy-five percent (75%) of the open space shall be in a contiguous tract. The open space should adjoin any neighboring areas of open space, other protected areas, and non-protected natural areas that would be candidates for inclusion as part of a future area of protected open space.

f. The open space shall be directly accessible to the largest practicable number of lots within the subdivision. Non-adjoining lots shall be provided with safe, convenient access to the open space.

3. *Permitted uses of open space.*

Uses of open space may include the following:

a. Conservation of natural, archeological or historical resources;

b. Meadows, woodlands, wetlands, wildlife corridors, game preserves, or similar conservation-oriented areas;

c. Walking or bicycle trails, provided they are constructed of porous paving materials;

d. Passive recreation areas;

e. Active recreation areas, provided that they are limited to no more than ten percent (10%) of the total Open Space and are not located within Primary Conservation Areas. Active recreation areas may include impervious surfaces. Active recreation areas in excess of this limit must be located outside of the protected open space;

f. Agriculture, horticulture, silviculture or pasture uses, provided that all applicable best management practices are used to minimize environmental impacts, and such activities are not conducted within Primary Conservation Areas;

g. Nonstructural stormwater management practices;

h. Easements for drainage, access, and underground utility lines; or

i. Other conservation-oriented uses compatible with the purposes of this ordinance.

4. *Prohibited uses of open space.*

a. Golf courses;

b. Roads, parking lots and impervious surfaces, except as specifically authorized in the previous sections;

c. Agricultural and forestry activities not conducted according to accepted Best Management Practices; and,

d. Other activities as determined by the Applicant and recorded on the legal instrument providing for permanent protection.

5. *Ownership and management of open space.*

a. Ownership of open space.

The applicant must identify the owner of the open space who is responsible for maintaining the open space and facilities located thereon. If a Homeowners Association is the owner, membership in the association shall be mandatory and automatic for all homeowners of the subdivision and their successors. If a Homeowners Association is the owner, the Homeowners' Association shall have lien authority to ensure the collection of dues from all members. The responsibility for maintaining the open space and any facilities located thereon shall be borne by the owner.

b. Management plan.

Applicant shall submit a Plan for Management of Open Space and Common Facilities ("Plan") that:

i. allocates responsibility and guidelines for the maintenance and operation of the open space and any facilities located thereon, including provisions for ongoing maintenance and for long-term capital improvements;

ii. estimates the costs and staffing requirements needed for maintenance and operation of, and insurance for, the open space and outlines the means by which such funding will be obtained or provided;

iii. provides that any changes to the Plan be approved by the Board of Commissioners; and,

iv. provides for enforcement of the Plan.

c. In the event the party responsible for maintenance of the open space fails to maintain all or any portion in reasonable order and condition, the City of Griffin may assume responsibility for its maintenance and may enter the premises and take corrective action, including the provision of extended maintenance. The costs of such maintenance may be charged to the owner, Homeowner's Association, or to the individual property owners that make up the Homeowner's Association, and may include administrative costs and penalties. Such costs shall become a lien on all subdivision properties.

6. *Legal instrument for permanent protection.*

a. The open space shall be protected in perpetuity by a binding legal instrument that is recorded with the deed. The instrument shall be one of the following:

i. A permanent conservation easement in favor of either:

a. a land trust or similar conservation-oriented non-profit organization with legal authority to accept such easements. The organization shall be bona fide and in perpetual existence and the conveyance instruments shall contain an appropriate provision for retransfer in the event the organization becomes unable to carry out its functions; or

b. a governmental entity with an interest in pursuing goals compatible with the purposes of this ordinance.

If the entity accepting the easement is not the City of Griffin, then a third right of enforcement favoring the City of Griffin shall be included in the easement;

ii. A permanent restrictive covenant for conservation purposes in favor of a governmental entity; or,

iii. An equivalent legal tool that provides permanent protection, if approved by the City of Griffin.

b. The instrument for permanent protection shall include clear restrictions on the use of the open space. These restrictions shall include all restrictions contained in this article, as well as any further restrictions the Applicant chooses to place on the use of the Open Space.

724. MEDICAL OVERLAY DISTRICT

724 A. Intent.

The intent of the Medical Overlay District (MOD) is to support the investment of the various institutional uses located within the district by providing restrictions on those uses deemed incompatible with the future land uses anticipated in the area. The area is also intended to have a more urban, pedestrian-friendly, walkable character in the future, and therefore replacement standards that support this vision are included in the overlay district.

724 B. Establishment and boundaries of the MOD.

The boundaries of the MOD shall conform to the limits of the area as depicted on the Official Zoning Map of the City of Griffin.

Medical Overlay District
Legend
Buildings - City
Buildings - County
Medical Overlay District
1 in = 600 ft
0
600
1,200
1,800
Feet
City of Griffin GIS Department
N
S
E
W
MERIWETHER ST
W COLLEGE ST
E COLLEGE ST
S 5TH ST
S 6TH ST
S 7TH ST
S 8TH ST
S 9TH ST
W OAK ST
E OAK ST
TYUS ST
RABUN ST
COLLINS ST
BASIN ST
PINEHURST AVE
GRAEFE ST
BECK ST
S HILL ST
W TERRACEDALE CT
E TERRACEDALE CT
TERRACE ST
TILNEY AVE
EMORY AVE
SYLVAN LN
ADDEVALE ST
WILL ST
ROCK ST
MILNER AVE
MAPLE DR
PARK RD
CAMP NORTHEN RD
DAP ST
GUM ST
CRESCENT W
GROVE LN
WOODLAND DR
CRESCENT RD
CRESCENT WAY
CLARENDON CT
CRESCENT LN

724 C. Permitted uses.

Table 7.3 shall govern the use of this overlay district, including permitted, prohibited, and special uses.

724 D. Prohibited uses.

All uses not listed in the 724 C and E.

724 E. Special uses.

The following uses, where permitted by right in the underlying zoning district, shall require a special use permit within the Medical Overlay District:

1. Licensed Day Care center
2. Financial Institutions
3. Funeral Home
4. Personal Care Homes
5. Hotel or Motel
6. Professional Offices (non-medical related)

724 F. Applicability

Within the Medical Overlay District, as designated below, the standards of this chapter shall apply to:

1. All new building construction;
2. All existing buildings that are not in conformance with the requirements of the underlying district or this overlay district at the time of adoption shall be governed by Section 505 (Non-conforming uses and structures);

724 G. Site plan.

All developments are required to submit a site plan pursuant to this Section and shall require the dedication and improvement of public facilities to provide adequate public streets, sidewalks, or public infrastructure.

724 H. Authority.

The Planning and Development Services Department is authorized to approve site plans within the Medical Overlay District.

724 I. Application procedure.

1. *Submittal requirements:*

   Site Plans shall be drawn at a scale of 1 inch equals 100 feet (1"=100'), and shall be limited to the following:

   a. Property boundary lines and dimensions; available utilities; and easement, roadway, rail lines and public rights of way crossing and adjacent to subject property;
   b. The proposed height, dimensions and arrangement of buildings;
   c. The type and location of proposed landscaping (including illustration of applicable landscape plates);
   d. The location of points of ingress and egress;
   e. The location of driveway and parking lots;

f. The location of trash collection, trash compaction, recycling collection and other similar service areas;

g. The location of garage doors, bay doors or loading areas;

h. The location of all roof, ground and wall mechanical equipment (e.g. air handling equipment, compressors, duct work, transformers and elevator equipment);

i. The location of any drive-through facilities;

j. Illustrations of the proposed building or building expansion and its relationship to existing building within 100 feet of the site;

k. Illustrations of the exterior of the proposed building or building expansion; and

l. Illustrations of proposed signs including location, materials, dimensions and type of lighting.

724 J. Approval criteria.

In approving a site plan, the approving entity shall consider the following:

1. Compliance with all requirements of Section 724 and the underlining zoning district;

2. That the site plan will not have a substantial or undue adverse effect upon the neighborhood, the character of the medical district, traffic conditions, parking, public infrastructure, and other matters affecting the public health, safety and general welfare;

3. That the site plan will be constructed and operated to be compatible with the neighborhood and with the purpose of this Section;

4. That the proposed development can be served by adequate utilities;

5. That the proposed development will not result in the destruction, loss, or damage of any significant natural, scenic, or historical district, site or feature; and

6. The approving entity may impose reasonable conditions to minimize adverse effects on the neighborhood or on public facilities, and to insure compatibility of the proposed development with surrounding properties, uses, and purpose and intent of this Section.

724 K. Administrative alteration to site plans.

1. *Authority.*

During the site plan review process of projects proposed within the Medical Overlay District, the Planning and Development Department is authorized to approve administrative alteration to the building envelope standards where, owing to special conditions, strict enforcement of certain standards would be physically impractical. This optional process shall occur only where the applicant requests an administrative alteration to a standard as specified below.

2. *Permitted alterations.*

The Planning and Development Department shall review the request in light of the intent and purpose of overlay district requirements. The Planning and Development Department shall have the authority to approve an administrative alteration for the following standards:

a. Building and parking placement.

i. Setback area – increase of up to ten percent (10%) of the maximum permitted setback

ii. Required building frontage (minimum percentage of build to) – reduction of up to five percent (5%) of required length

iii. Parking setback – decrease of up to five percent (5%) of the minimum required setback

3. *Approved criteria.*

To approve an administrative alteration, the Planning and Development Services Department shall make an affirmative finding that all of the following criteria are met;

a. An administrative alteration does not conflict with streets, sidewalks, easements or landscape requirements.

b. An administrative alteration does not injure or damage the use, value or enjoyment of surrounding property or hinder or prevent the development of surrounding property

c. An administrative alteration does not have an adverse impact on land use compatibility

d. An administrative alteration does not materially and adversely affect adjacent land uses and the physical character of uses in the immediate vicinity of the proposed.

e. An administrative alteration will not have an adverse impact on the urban form and/or the street-space.

724 L. Special use.

Follow the procedures outlined in Section 406 and 503 of the Unified Development Code.

724 M. Building envelope standards.

1. *Applicability.*

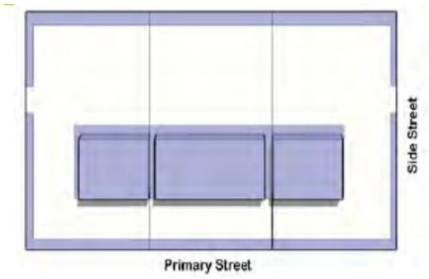

Buildings are set back further from the street to allow for easier access by automobile. Parking occurs in front of buildings but is limited to two bays with a single drive aisle. There is usually a single entrance facing the primary street served by an internal sidewalk.

2. *Building regulations.*

The building standards in the following table shall replace and supplement the respective regulations of the underlying nonresidential districts:

BUILDING PARKING & PLACEMENT	
Lot Area & Width	
Area (min sq. ft.)	--
Width (min ft.)	--
Setback Area	
Front Setback (min ft.)	7
Front Setback (max ft.)	0
Side/Rear Setback (min ft.)	
Abutting Single-Family	10
Abutting Multifamily, Nonresidential	0 or 10
Abutting Alley	5
Building Separation	10
Parking Setback (min ft.)	
From Primary Street	10
From Side Street	10
Abutting Single-Family	10
Abutting Multi-Family, Nonresidential, Alley	0
Building Entrance	
Facing Primary Street	Allowed

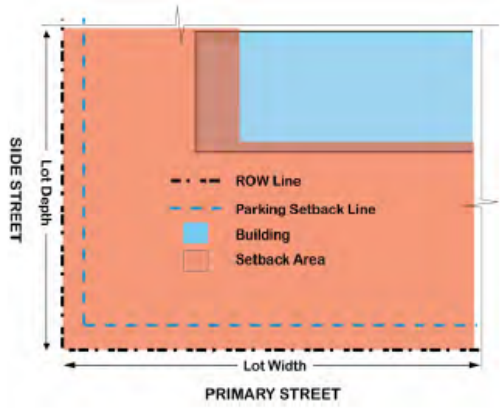

BUILDING & PARKING PLACEMENT

LOT AREA & WIDTH

No minimum

SETBACK AREA

10 ft. behind ROW line.

PARKING SETBACK LINE

1. Primary/side street setback. Min. 10 ft. behind ROW line.
2. Parking shall be located behind the parking setback line. A single 22 ft. drive aisle serving 20 ft. deep parking spaces on one or both sides may be located between the building and the street. Where parking is provided between the building and the street, the 8 ft. parking setback area shall be landscaped.

BUILDING ENTRANCE

1. A building located on two primary streets shall have either one entrance per frontage or provide one angled entrance at the corner of the building at the intersection. Building located on corner lots shall meet all applicable intersection sight distance requirements. Additional entrances off another street, pedestrian area, or internal parking area are permitted.
2. Recessed entrances shall not exceed 3 ft. in depth and one floor in height.

HEIGHT

BUILDING HEIGHT

See underlining zoning district for maximum height requirements.

3. *Height standards.*

The following map designates maximum building story limits with the Medical Overlay District (MOD).

(*Remainder of page left blank*)

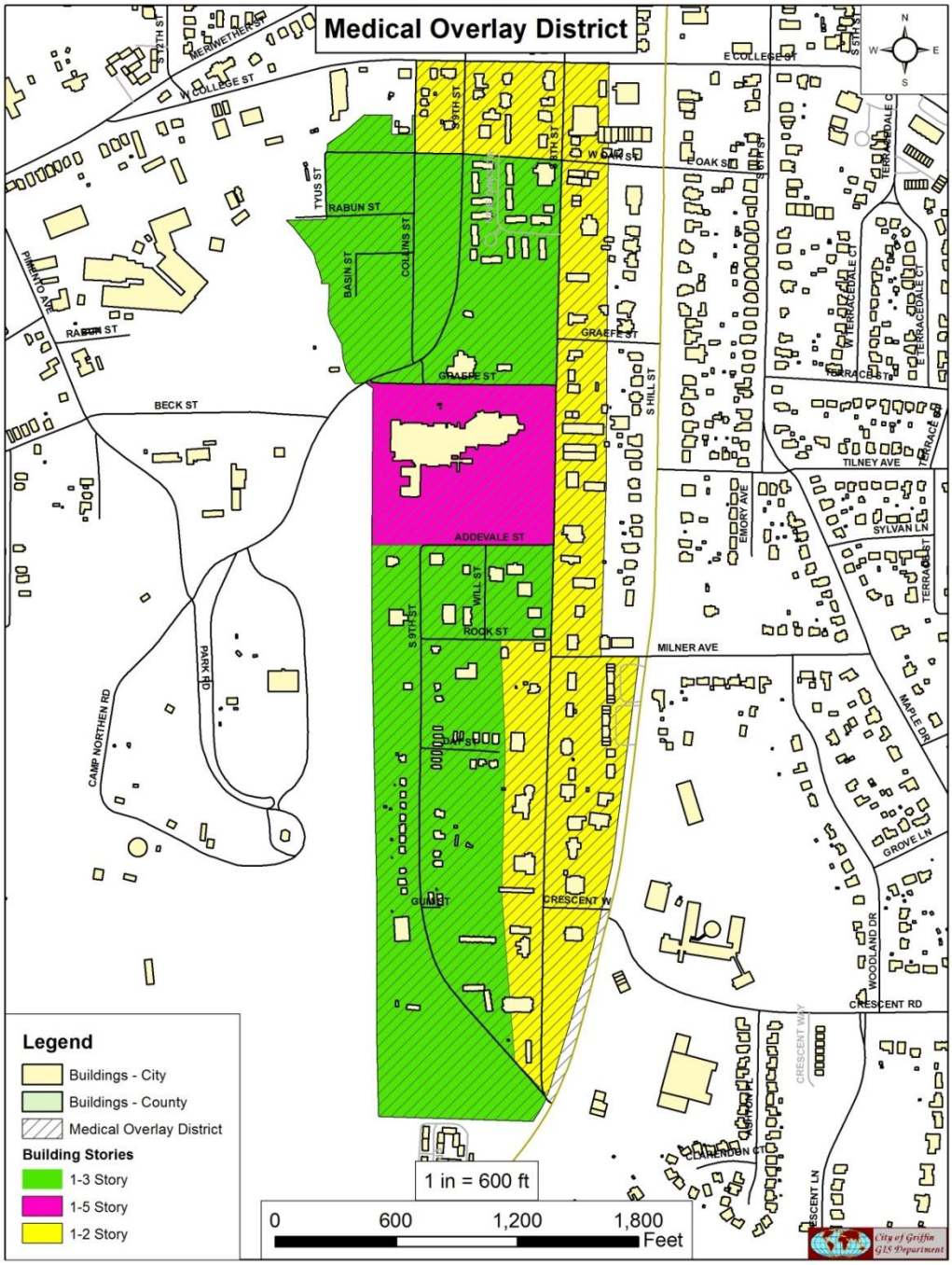
Medical Overlay District
Legend
Buildings - City
Buildings - County
Medical Overlay District
Building Stories
1-3 Story
1-5 Story
1-2 Story
1 in = 600 ft
0
600
1,200
1,800
Feet
City of Griffin GIS Department
N
S
E
W
MERWETHER ST
W COLLEGE ST
E COLLEGE ST
W OAK ST
E OAK ST
TYUS ST
RABUN ST
BASIN ST
COLLINS ST
PINEHURST AVE
BECK ST
GRAEFE ST
S HILL ST
ADDEVALE ST
WILL ST
ROCK ST
S 9TH ST
PARK RD
CAMP NORTHEN RD
MILNER AVE
EMORY AVE
TILNEY AVE
SYLVAN LN
TERRACE ST
MAPLE DR
GROVE LN
WOODLAND DR
CRESCENT RD
CRESCENT WAY
CRESCENT LN
CLARENDON CT
W TERRACEDALE CT
E TERRACEDALE CT

4. *Streetscapes standards.*

The following minimum streetscape standards apply along a Pedestrian Frontage as designated in building envelope standards.

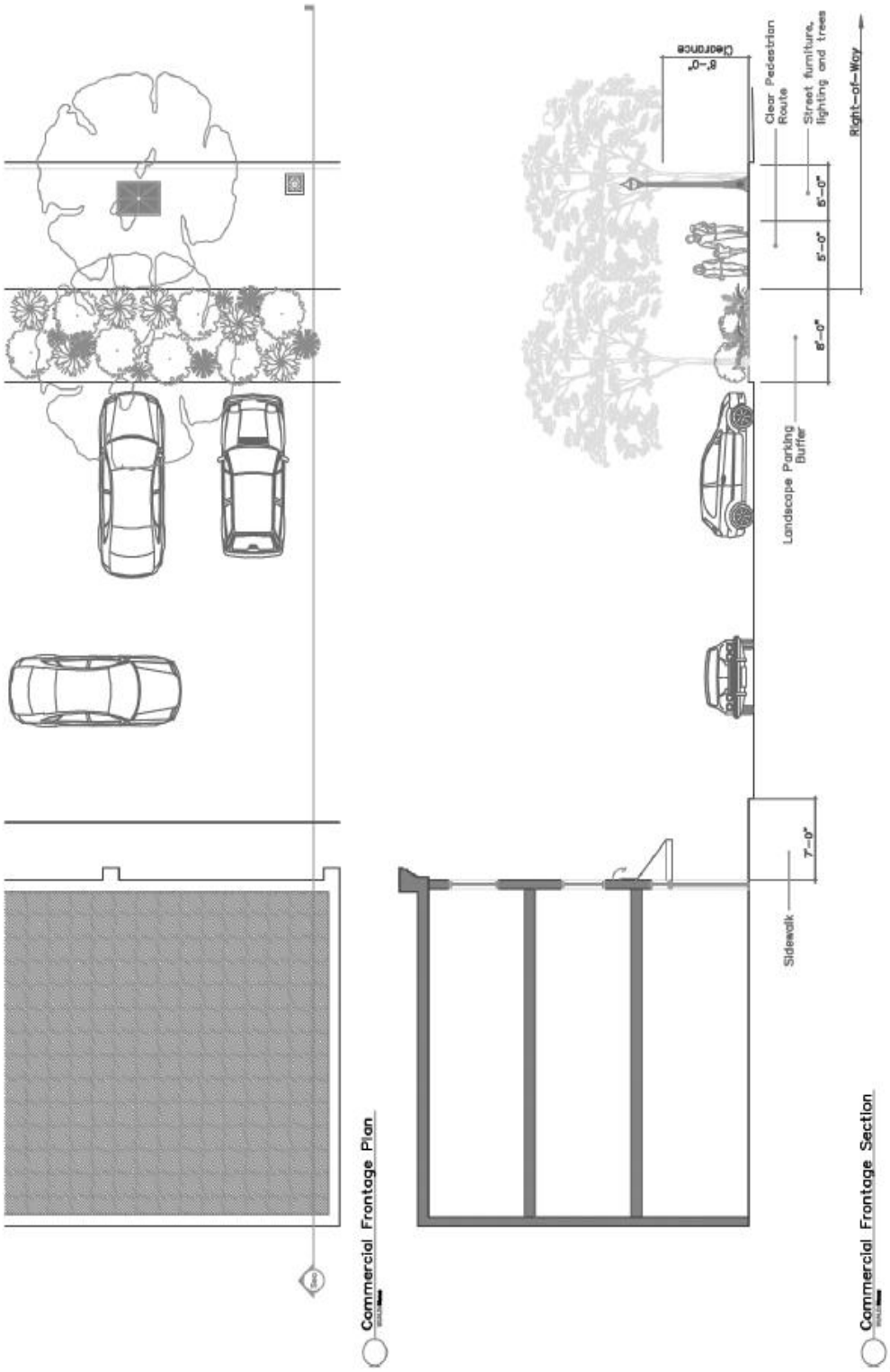

Frontage Plan

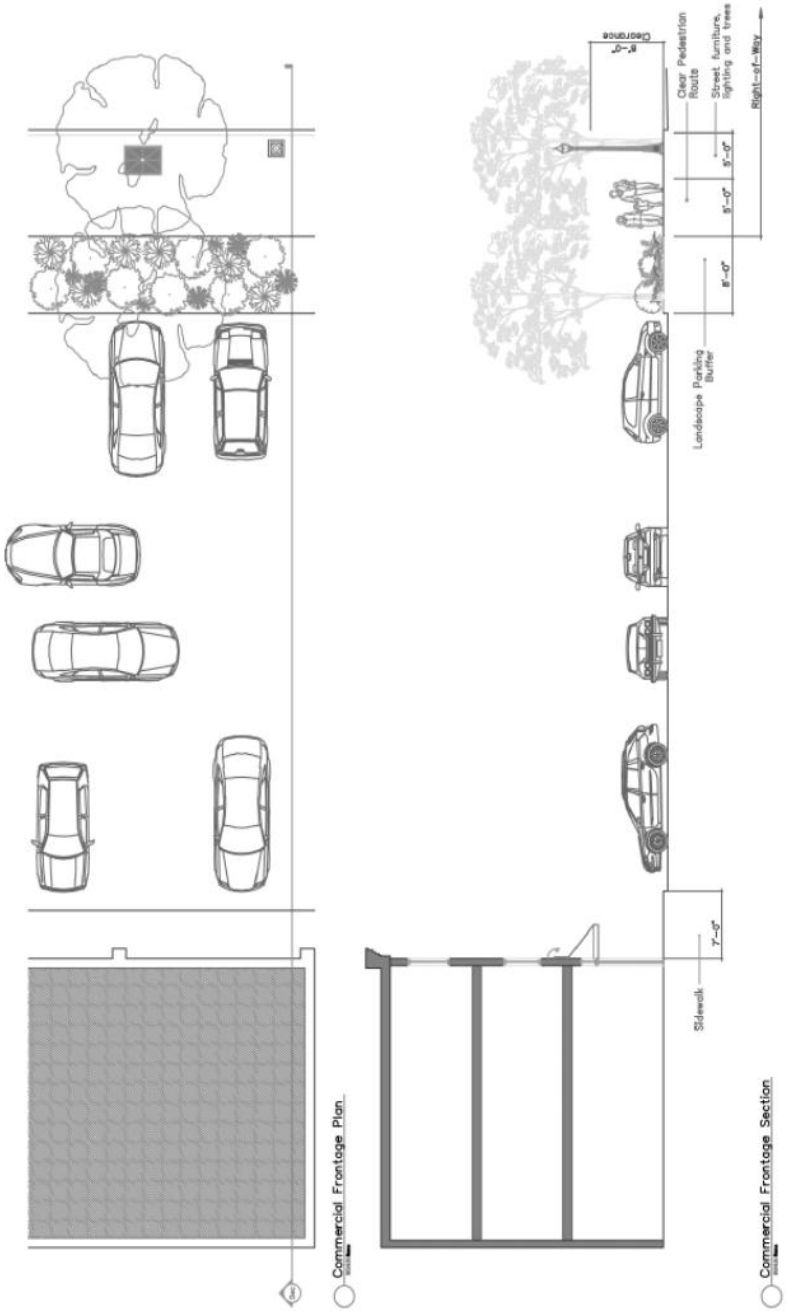

5. *Street trees.*

A project developed in the Medical Overlay District shall provide street trees located at least every thirty (30) feet on center. The street trees shall be planted in grates that are American with Disabilities Act (ADA) compliant or in planters with curbed beds. The location of street trees shall conform to the applicable streetscape plate.

724 N. Site development standards.

1. *Applicability.*

The following supplemental site development standards apply only in the Medical Overlay District (MOD).

2. *Landscaping and screening.*

a. Any building, structure, or use is subject to the landscaping requirements of this chapter.

b. Trash collection, trash compaction, recycling collection and other similar service areas shall be located on the side or rear of the building and shall be screened from view from residentially zoned property or public rights of way. Screening enclosures shall be fully enclosed walls or fences at least eight feet high with self-closing access doors and shall be constructed of the same materials as the primary building or buildings.

c. Trash collection, trash compaction, recycling collection and other similar service area shall be located a minimum of fifty (50) feet away from any residentially zoned property line.

d. No garage doors bay doors or loading areas shall face a pubic roadway.

e. Loading areas shall be subject to the following screening requirements:

i. Provide a minimum 100% year-round screen of all loading areas visible from residentially-zoned property or public right-of-way.

ii. This screen shall consist of berms, walls, fences, plant material or combination totaling eight feet in height at installation or completion of construction. Wall or fence material shall be compatible with primary structure.

iii. Loading docks shall be located to the side and rear of building when within fifty (50) feet of any residentially-zoned property, unless the loading area is wholly within a closed building.

f. All roof, ground and wall mounted mechanical equipment (e.g., air handling equipment, compressors, duct work, transformers and elevator equipment) shall be screened from view from residential properties or public right-of-way at ground level of the property line.

g. Roof mounted mechanical equipment shall be shielded from view on all sides. Screening shall consist of materials consistent with the primary building materials, and may include metal screening or louvers which are painted to blend with the primary structure.

h. Wall or ground mounted equipment screening shall be constructed of planting screens; brick, stone and wrought iron.

i. Above ground utilities and appurtenances to underground utilities which require above ground installation shall be screened by a continuous planting of shrubs, with a minimum mature height equal to that of the utility structure. Required access ways to these utilities are exempt from screening provisions.

3. *Fences and walls.*

a. Fences and wall shall be constructed of high quality materials, such as decorative blocks, brick, stone and wrought iron.

b. Chain-link fences, barbed wire or concertina wire shall not be permitted.

c. Breaks in the fence or wall may be provided for pedestrian connections to adjacent developments.

d. The maximum length of a continuous, unbroken and uninterrupted fence or wall shall be 100 feet. Breaks shall be provided through the use of columns, landscaped areas, transparent sections and a change in material.

4. *Drive-through facilities.*

a. A drive-through window shall only be permitted where it is not facing the public right of way of a Pedestrian or Urban Frontage.

b. No drive-through window shall be permitted on the side of a building adjacent to any residentially zoned property.

5. *Parking.*

See underlying zoning requirements for parking.

6. *Signs.*

All signs within the Medical Overlay District shall be monument signs to be erected not closer than five (5) feet from the right of way (on private property). Monument signs shall not exceed ten (10) feet in height or forty (40) square feet in sign area.

7. *100-year Floodplain.* No permanent structure shall be constructed within the boundary of the 100-year floodplain unless the structure meets minimum floodplain ordinance requirements as established in Chapter 50 – Floods of the Code of Griffin, Georgia."

(Amended 8-27-2013)

Article 8. PARKING AND LOADING

801. SCOPE OF ARTICLE

Except as provided in this article, no application for a building permit shall be approved unless there is included with the plan for such building, improvements or use, a site plan showing the required space reserved for off-street parking and service purposes. Occupancy shall not be allowed unless the required off-street parking and service facilities have been provided in accordance with those shown on the approved plan.

802. PARKING PLAN REQUIRED

802 A. Before any building permit is issued, the parking lot layout and area must be found by the zoning administrator to be in compliance with all requirements of this article. The building inspector shall not allow occupancy or use of a building until advised by the zoning administrator that parking facilities meet the requirements of this article.

802 B. No permit shall be issued for any parking area, except those for detached, single-family residences, until the plans and specifications, including required location, entrances, exits, aisles, landscaping, screening, surface materials and drainage, have been submitted to the zoning administrator or for review by the historic preservation commission, whichever has jurisdiction, and are in compliance with this section. Plans shall include proper drainage and stormwater management, surface materials, curbing and screening as may be required, and with handicapped and loading or other special (i.e., compact, porous material) spaces also designated when required.

803. PARKING AREA DESIGN

Parking spaces shall have a minimum width of nine feet and a length of 18 feet.

803 A. Compact Car Dimensions. Spaces marked and intended for compact cars can be reduced to a width of eight feet by a length of 16 feet.

803 B. Interior Drives. There shall be provided adequate interior driveways to connect each parking space with a public right-of-way.

1. Interior driveways shall be a minimum of 24 feet wide where used with 90 degree angle parking; a minimum of 18 feet wide where used with 60 degree angle parking; and a minimum of 12 feet wide where used with 45 degree angle parking and a minimum of 12 feet wide where used with parallel parking or where there is no parking.
2. Interior driveways shall be a minimum of 12 feet wide for one-way traffic movement and a minimum of 24 feet wide for two-way traffic movement.

803 C. Location of parking: non-residential and multi-family districts.

1. Parking shall not be located in the front between a building on the street, but shall be distributed such that all or the majority of the parking is located in the rear (or rear and side).
   - **a.** Exceptions.
     Lots smaller than 13,000 square feet may be exempt from the location provision.
   - **b.** Redevelopment on lots with existing structures and nonconforming sites must strive to comply with standards herein, but may qualify for administrative infill variances as provided in Article 6.
2. Parking shall not be permitted in required buffer areas.
3. Parking on lots adjacent to residential lots may not be located within 30 feet of the property line of an abutting residentially zoned lot.
4. Parking may be permitted in side and rear setbacks, provided it does not violate C(3) above related to distance of parking from adjacent residential property lines.

804. ACCESSIBLE PARKING

Access aisles adjacent to accessible spaces shall be a minimum of five feet wide making the total space 13 feet wide. One in eight accessible parking spaces, but not less than one, shall be served by an access aisle a minimum of eight feet wide and shall be designated "van accessible." Two accessible spaces may share one aisle.

Accessible parking shall be located as close as possible to an accessible entrance, walkway, elevator or ramp and where feasible shall be the main entrance used by the majority of the public. All accessible parking spaces shall be identified by above-grade signs as being reserved for physically handicapped persons.

Table 8. 1 Accessible Parking

Total Spaces in Lot	Required Number of Accessible Spaces
Up to 25	1
26 to 50	2
51 to 75	3
76 to 100	4
101 to 150	5
151 to 200	6
201 to 300	7
301 to 400	8
401 to 500	9
501 to 1,000	2% of total
Over 1,000	20, plus 1 for each 100 over 1,000

805. JOINT PARKING FACILITIES

Location of off-street parking areas.

All off-street spaces required by this section shall be provided on the same lot with the main building or use which it serves unless the project is the reuse of any structure built prior to 1959 which is zoned CBD and located in the Historic District shall be exempt from off-street parking requirements. Upon demonstration that the parking spaces required by this section are not available and cannot be reasonably provided on the same lot was the building structure or use which it serves, the zoning administrator may review a joint parking facilities plan.

Joint parking facilities.

Two or more neighboring uses, of the same of different type, may provide joint parking facilities, provided that the number of off-street parking spaces is not less than the sum of the individual requirements. These spaces must be provided on a lot a substantial portion of which is within eight hundred (800) feet of such building structure or use. This provision shall require submittal of evidence of ownership or a valid agreement to the lease the parking area off-site that is intended to be used to comply with this section.

806. PAVEMENT MARKINGS AND SIGNS

Each off-street parking space shall be clearly marked and directional arrows or signs shall be provided wherever necessary. Markers, directional arrows and signs shall be properly maintained by the property owner so as to ensure their maximum efficiency.

807. NUMBER OF PARKING SPACES

In order to assure proper and uniform development of parking areas, to relieve traffic congestion on the streets, to lessen the amount of impervious surface in the city and to minimize any detrimental effects on adjacent properties, off-street parking spaces shall be provided and maintained as called for in the following schedule. The requirements shall be the same as a similar use as mentioned herein. Parking requirements for additions to existing uses shall be based upon the new addition even if the existing use is non-conforming.

No existing or future off-street parking area shall be reduced in capacity to less than the minimum required number of spaces, or increased to more than the maximum permitted number of spaces, or altered in design or function to less than the minimum standards, unless provided by this section.

Table 8. 2 Number of Parking Spaces

USE	MINIMUM PARKING REQUIRED	MAXIMUM PARKING PERMITTED
COMMERCIAL USES		
Veterinary Service; kennel	One per 400 square feet	One per 250 square feet
Art Studio	One per 400 square feet	One per 300 square feet
Automated teller machine, no drive-through	Two per machine	Three per machine
Auto parts store	One per 500 square feet	One per 300 square feet
Automobile sales	One per 200 square feet of repair space plus one per 400 square feet of showroom/office	One per 150 square feet of repair space plus one per 300 square feet of showroom/office
Garage, Major/Minor	One per 250 square feet	One per 200 square feet
Financial Institution	One per 300 square feet (also see stacking requirements for drive-through facilities)	One per 200 square feet (also see stacking requirements for drive-through facilities)
Personal Service-Barber shop or beauty parlor	One per 300 square feet	One per 250 square feet
Home Stay Bed and Breakfast	Two for the owner-operator plus one per guest bedroom	Two for the owner-operator plus one per guest bedroom
Car wash	Two stacking spaces for each car wash lane plus two drying spaces per lane	Three stacking spaces for each car wash lane plus two drying spaces per lane
Office-Contractor's establishment	One per 300 square feet of office space and one per 2,000 square feet of outdoor storage	One per 250 square feet of office space and one per 1,500 square feet of lot outdoor storage
Convenience store with gasoline or diesel fuel	One per 200 square feet	One per 150 square feet
Convenience store without gasoline or diesel fuel	One per 200 square feet	One per 150 square feet
Day care center	One per 500 square feet	One per 375 square feet
Funeral home or mortuary	One per four seats in largest chapel	One per three seats in largest chapel

Furniture and home furnishing store	One per 600 square feet	One per 300 square feet
Grocery store	One per 300 square feet	One per 250 square feet
Hardware store	One per 400 square feet	One per 300 square feet
Health or fitness club	One per 200 square feet	One per 150 square feet
Hotel, extended stay	1.5 per unit lodging unit	Two per lodging unit
Hotel or motel	One per lodging unit, plus one per each 150 square feet of banquet, assembly, meeting, or restaurant seating area	1.2 per lodging unit, plus one per each 100 square feet of banquet, assembly, meeting, or restaurant seating area
Laundromat	One for each three washer/dryer combinations	One for each two washer/dryer combinations
Nursery or garden center	One per 300 square feet plus one per 1,500 square feet outdoor sales or display area	One per 250 square feet plus one per 1,000 square feet outdoor sales or display area
Office	One per 300 square feet	One per 250 square feet
Open air sales	One per 250 square feet of indoor floor space plus one per 600 square feet of outdoor sales	One per 200 square feet of indoor floor space plus one per 500 square feet of outdoor sales
Personal service establishment	One per 250 square feet	One per 200 square feet
Photofinishing laboratory	One per 250 square feet	One per 200 square feet
Photographic studio	One per 300 square feet	One per 250 square feet
Restaurant, bar, or tavern	One per 125 square feet	One per 75 square feet
Retail store	One per 275 square feet	One per 250 square feet
Self storage facility (mini-warehouse)	One per 40 storage units	One per 25 storage units
Service station	One per 250 square feet of office space plus two per service bay	One per 200 square feet of office space plus three per service bay
Shopping center	One per 275 square feet	One per 225 square feet
LIGHT INDUSTRIAL USES		
Manufacturing, processing, assembling	One per 1,300 square feet	One per 1,000 square feet
Warehouse	One per 2,000 square feet	One per 1,500 square feet
Wholesale	One per 1,000 square feet	One per 600 square feet
GOVERNMENT - INSTITUTIONAL USES		
Assembly hall; auditorium; nonprofit club or lodge	One per four seats in room with greatest seating capacity or one per 40 square feet in largest assembly area without fixed seating	One per three seats in room with greatest seating capacity or one per 30 square feet in largest assembly area without fixed seating
Church, temple, synagogue and place of worship	One per four seats in room with greatest seating capacity or one per 40 square feet in largest assembly area without fixed seating	One per three seats in room with greatest seating capacity or one per 30 square feet in largest assembly area without fixed seating

Government office	One per 300 square feet	One per 250 square feet
Hospital	1.5 per bed	Two per bed
Library	One per 400 square feet	One per 300 square feet
Museum	One per 500 square feet	One per 300 square feet
Nursing home	One per four beds	One per three beds
Post office	One per 200 square feet	One per 150 square feet
School	One per 300 square feet	One per 200 square feet
School for the arts	One per 300 square feet	One per 200 square feet
School, trade or business	One per 200 square feet	One per 150 square feet
RESIDENTIAL USES		
Multi-family, one bedroom	1.5 per unit plus 0.1 per unit for guest space	Two per unit plus 0.2 per unit for guest space
Multi-family, two or greater bedroom	1.5 per unit plus 0.1 per unit for guest space	Two per unit plus 0.2 per unit for guest space
Home occupation	(See provisions for home occupations)	
Residence within building containing a non-residential use	One per unit	1.5 per unit
Single-family detached or attached	Two per unit	Four per unit
Two-family dwelling	Two per unit	Three per unit
RECREATIONAL FACILITIES		
Amusement park	Per parking generation study funded by applicant and approved by the zoning administrator	
Athletic field	20 spaces per field	25 spaces per field
Billiard hall/amusement arcade	One per 200 square feet	One per 150 square feet
Bowling alley	Two per each bowling lane (add parking for billiard hall/ amusement arcade, if provided)	Three per each bowling lane (add parking for billiard hall/ amusement arcade, if provided)
Community center	One per 300 square feet	One per 250 square feet
Golf course	2.5 per hole	Three per hole
Golf driving range, principal use	0.75 per tee	1 per tee
Ice or roller skating rink	One per 200 square feet	One per 150 square feet
Miniature golf	Two per hole	Three per hole
Stadium or sport arena	One per twelve feet of bench seating	One per ten feet of bench seating
Swimming pool - subdivision amenity	One per 150 square feet of surface water area	One per 100 square feet of surface water area
Swimming pool - public	One per 125 square feet of surface water area	One per 75 square feet of surface water area
Tennis or racquet ball court	Two per court	Three per court
Theater, cinema, auditorium, stadium, assembly hall,	One per four fixed seats, or one space for each 40 square feet of floor area available for	One per three fixed seats, or one space for each 40 square feet of floor area available for

gymnasium, community recreation center	the accommodation of moveable seats, plus one space for each employee	the accommodation of moveable seats, plus one space for each employee

808. MAXIMUM PARKING EXCEPTIONS

808 A. Any parking above the maximum parking shown in the above table must be pervious but shall never exceed 125% of the maximum or is provided through use of structured parking.

808 B. For some uses, a property owner may build more than one hundred twenty-five (125) percent of the required parking ratios without building pervious spaces or structured parking. The property owner must submit a parking study for the proposed development showing the need for the additional parking must be submitted to the Planning and Development Director for approval. This applies to the following uses: golf courses, hospitals, cultural facilities, theaters, auditoriums, gymnasiums, stadiums/arenas, transit stations, airports, and freight service facilities.

808 C. Where a project is intended to be developed in phases, the Planning and Development Director may approve development of a parking area intended to serve current and future development.

808 D. *Modifications*. The Planning and Development Director may reduce the required number of spaces by up to five percent for uses within one-quarter (¼) mile of a designated heavy rail, streetcar/light rail or bus rapid transit station.

808 E. *Carpool/vanpool parking*. For office, industrial, and institutional uses where there are more than twenty (20) parking spaces on the site, the following standards must be met:

1. Five (5) percent of the parking spaces on site must be reserved for carpool use before 9:00 AM on weekdays. More spaces may be reserved, but they are not required.
2. The spaces will be those closest to the building entrance or elevator, but not closer than the spaces for disabled parking and those signed for exclusive customer use.

Signs must be posted indicating these spaces are reserved for carpool use before 9:00 AM on weekdays.

809. MINIMUM NUMBER OF LOADING SPACES REQUIRED

809 A. Industrial, wholesale and retail operations shall provide loading spaces as follows:

1. *Spaces appropriate to functions.* Off-street loading spaces shall be provided as appropriate to the functions and scope of operation of individual of groups of buildings and uses.
2. *Design of loading spaces.* Off-street loading spaces shall be designed and constructed so that all maneuvering to park and un-park vehicles for loading can take place entirely within the property lines of the premises. Loading spaces shall be provided so as not to interfere with the free, normal movement of vehicles and pedestrians on public rights-of-way.
3. *Ingress and egress.* Ingress and egress to off-street loading spaces shall conform to driveway entrance regulations as required by the Georgia Department of Transportation and the City of Griffin Development Ordinance.
4. Industrial and wholesale operations with a gross floor area of 10,000 square feet or over shall conform to the following schedule:

Table 8. 3 Loading Spaces

Gross floor area	Required loading berths
10,000—49,000 square feet	1
49,000—100,000 square feet	2
100,000—160,000 square feet	3
160,000—240,000 square feet	4
240,000—320,000 square feet	5
320,000—400,000 square feet	6
Each 90,000 above 400,000 square feet	1

Remainder of page intentionally left blank.

Article 9. PARKING LOT LANDSCAPE AND DESIGN

901. SCOPE OF REQUIREMENTS AND STANDARDS

The requirements and standards for installation and maintenance shall apply to landscape planting areas in off-street parking facilities and service areas. Such requirements and standards shall apply to all new development and redevelopment in the city. Applications for review of preliminary site plans, minor site plans or final site and subdivision plans shall include the required space reserved for off-street parking and service purposes. The purpose of landscaping parking facilities is to enhance the quality of life by minimizing impacts of noise, dust, pollution, sun, heat, air pollution, Stormwater runoff, motor vehicle headlight glare and other activities associated with parking lots. No certificate of occupancy shall be issued until all requirements for off-street parking and service facilities have been met in accordance with this ordinance.

902. DRAINAGE, CONSTRUCTION AND MAINTENANCE

All off-street parking, loading and service areas shall be drained, stabilized and paved so as to prevent damage to adjacent properties and/or public streets and shall be constructed of materials, which, will assure an environmentally safe impervious surface resistant to erosion. All such areas shall be at all times maintained at the expense of the owners thereof in a clean, orderly and dust free condition to the extent that it does not create a nuisance.

903. SEPARATION FROM WALKWAYS, SIDEWALKS AND STREETS

All off-street parking, loading and service areas shall be separated from walkways, sidewalks and streets by curbing or other suitable protective devices and approved landscaping.

904. PARKING LOT AND OTHER VEHICLE USE AREAS

Off-street multi-family, commercial, industrial and institutional parking lots and other vehicle use areas shall contain landscaping and plantings, with the exception of approved or permitted driveways. The minimum total lot area to be landscaped shall be ten percent for tracts of five acres or less and 15 percent for tracts of 5.1 acres or more of the total available net area of the development site. This amount of land shall be devoted to landscaping which includes but is not limited to grass, shrubs, vines and trees.

904 A. Interior landscaping.

Interior landscaping of parking lots shall contain planter islands located at both ends of each single and double parking rows and one planter island every 10 parking spaces in a row. Planter islands shall be a minimum of 160 square feet in area for single parking rows and 320 square feet in area for double parking rows. Planter islands shall contain at least one tree for single parking rows and two trees for double parking rows. All trees shall have a minimum height when planted of ten feet and a mature height of a minimum of 20 feet. The remaining area in the planter islands shall be landscaped with appropriate materials.

904 B. Border landscaping.

Each parking lot or vehicular use area must have a planted landscape strip not less than ten feet in width parallel to right of way lines and planted borders not less than

five feet in width along any side of a parking lot or vehicular use area that abuts adjoining property that is not a public right-of-way.

904 C. Access ways.

Landscape border areas and landscape strips may be interrupted to provide vehicular and/or pedestrian ingress and egress.

904 D. Encroachment.

Landscaped areas shall require protection from vehicular encroachment. Wheel stops or curbing shall be located so as to prevent damage by vehicles to any tree, fence, shrub or other landscaping.

904 E. Off-street parking lots.

In off-street parking lots, when the city has determined that the strict application of this ordinance will interfere with the function of the vehicle use area, the required interior landscaping may be located near the perimeter of the paved area, subject to the approval of the planning and development, public works and utilities departments.

904 F. Driveway.

When a driveway (ingress) intersects with public right-of-way the city public works department shall review proposed landscaping to ensure unobstructed visibility for vehicular traffic entering or leaving the site.

905. PLANT MATERIAL STANDARDS

905 A. Trees.

Trees shall be subject to the following:

1. *Height*. Trees shall have a minimum height of ten feet at the time of planting and a mature height minimum of 20 feet.
2. *Planting area*. The planting area for each tree shall be maintained with an approved landscape material.

905 B. Shrubs and hedges.

Shrubs and hedges shall be subject to a minimum height of 18 inches.

905 C. Vines, ground cover, etc.

Vines, ground cover, lawn grasses and architectural planters shall be subject to the following:

1. Vines shall be 12 inches in length within one calendar year from the time of planting.
2. Ground covers other than lawn grasses shall be planted so as to provide 75 percent coverage within one calendar year from the time of planting.
3. Lawn grasses shall be perennial species capable of thriving in the city. They shall be planted so as to achieve complete coverage within two calendar years from the time of planting. Grass areas may be sodded, sprigged, plugged or seeded. Sod shall be used in swales or other areas subject to erosion.
4. Architectural planters for shrubs shall have a planting area of not less than ten square feet and a depth of not less than 18 inches. Architectural planters for trees shall have a planting area of not less than 12 square feet and a depth of not less than four feet.

905 D. Maintenance, preservation and use standards.

1. All required plant material and nonliving landscape material shall be maintained in good condition at all times and is the responsibility of the property owner.
2. Dead plant material shall be replaced within a time period appropriate to the growing season of the species in question, not to exceed 90 days.

3. All required landscape areas shall be protected from unpermitted vehicular encroachment by use of wheel stops, curbing or other suitable methods. Vehicles may overhang no more than two feet into the landscape areas.
4. No required landscape area, buffer or setback shall be used for parking, driveways, service areas or any functional uses contrary to the intent and purpose of this ordinance.

905 E. Recommended trees for parking lots.

Table 8. 4 Recommended Trees

Crepe myrtle	**Persian parrotia**
Maple, amur	Maple, trident
Elm, Chinese	Hornbeam, European
Maple, Japanese	Maple, red
Pistache, Chinese	Planetree, London
Oak, Shumard	White fringetree
Oklahoma Redbud	Flowering dogwood
Japanese dogwood	American smoketree
Washington hawthorne	Nellie R. Stevens holly
Japanese crabapple	Southern wax myrtle
Willow oak	Pin oak
Overcup oak	Chaste tree
Japanese zelkova	Chinese fringetree

906. MAINTENANCE

Landscaping shall be fully completed prior to issuance of a final certificate of occupancy. If it is not feasible to complete the landscaping due to weather conditions or other extenuating circumstances; the owner shall post a performance or landscaping bond, in the form of cash, letter of credit or commercial surety bond, in accordance with this ordinance. The owner shall maintain all landscaping in good condition and replant, as necessary all diseased or dead plants and/or trees.

Article 10. MAPS

1001. ESTABLISHMENT OF OFFICIAL ZONING AND OTHER MAPS

In order to implement this ordinance, the Official Zoning Map is established to facilitate the administration of this ordinance and is made an integral part of this ordinance. The official zoning map shall be on display at all times in the zoning administrator's office, during regular business hours of the planning and development department. This map shall be available to the public for inspection and copying in accordance with the Georgia Open Records Law. The zoning administrator shall assist any interested person in obtaining an accurate reproduction of this map.

1002. OFFICIAL ZONING MAP

1002 A. Zoning district boundaries.

All zoning district boundaries shall be shown on the official map. All amendments to the zoning map shall follow the guidelines established in Article 4 of this ordinance.

1002 B. Centerlines as district boundaries.

Unless otherwise specifically indicated, where district boundaries are indicated on the zoning map as approximately following the centerline of a street, highway, railroad right-of-way line, stream bed or river bed, such centerlines shall be construed to be such district boundaries.

1002 C. Boundaries following platted lot lines.

Boundaries indicated as approximately following platted lot lines shall be construed as following such lot lines.

1002 D. Boundaries following corporate limit line.

Where district boundaries are indicated on the zoning map as approximately following the corporate limit line of the city, then, such corporate limit lines shall be construed to be such district boundaries.

1002 E. Boundaries parallel to setbacks.

Where district boundaries are indicated on the zoning map as being set back from a street, road, highway, railroad or river and parallel thereto, then, such district boundaries, unless specifically indicated, shall be construed as being at the scaled distance from the centerline of such street, road, highway, railroad, stream or river as being parallel thereto.

1003. OTHER MAPS

For convenience in showing zoning district classifications to individual tracts of property, a series of Spalding County Tax Map may be color-coded. These maps may be kept in the office of the zoning administrator for public reference; provided, however, only the official zoning map should be relied upon in determining how a particular property is validly zoned.

Article 11. TREE ORDINANCE (Reserved)

Article 12. SIGNS

1201. FINDINGS AND PURPOSE

1201 A. The City of Griffin finds that signs are a proper use of private property, are a means of personal free expression and a necessary component of a commercial environment. As such, signs are entitled to the protection of the law. In the absence of regulation, however, the number of such signs tends to proliferate, with property owners desiring ever increasing numbers and sizes of signs, leading to cluttered and aesthetically blighted thoroughfares. In addition, the competition among competing sign owners for visibility of their signs contributes to safety hazards for both vehicles and pedestrians and undermines the sign owners' original purpose of presenting a clear message of its idea or identification of its premises.

1201 B. Regulation of the size, height, number and spacing of signs is necessary to protect the public safety, to assure compatibility of signs with surrounding land uses, to enhance the business and economy of the City, to protect the public investment in the streets and highways, to maintain the tranquil environment of residential areas, to promote industry and commerce, to eliminate visual clutter and blight, to provide an aesthetically appealing environment, and to provide for the orderly and reasonable display of advertising for the benefit of all the City's citizens.

1201 C. The City further finds that there is a substantial difference between signs erected by public authority and signs erected by private citizens or businesses. Signs erected by public authority are virtually all erected for the purpose of maintaining the public safety either through direct control of traffic or through provision of such type signage as street signs which enable the traveling public to know where they are located and to find where they are going. As such, with the exception of signs identifying government buildings, virtually all government signs are erected purely for public safety purposes. Moreover, their use in the public right-of-way is necessary to ensure their visibility to the motoring public. The Board of commissioners finds that public utility signs are frequently of the same nature as those signs erected by governmental entities in that they provide necessary information to safeguard the public from downed power lines and from street excavations. Even where signs serve a propriety purpose, such as identifying markings on utility poles, those signs are marked primarily for the purpose of benefiting the public generally through identification of locations where there may be temporary losses of power.

1201 D. The City finds that some signage has a single targeted function and that identification of such signage by description is impossible without referring to its function. For instance, address numerals are used for the sole purpose of locating addresses, which is of benefit to persons looking for those addresses and is essential to public safety personnel responding to emergencies. Subdivision signs at the entrances to subdivisions and sign plazas located by the City or its agent at key intersections serve a similar purpose in enabling both the traveling public and emergency personnel to quickly locate subdivision entrances for the purpose of either visitation or responding to emergency calls. While such signage is referenced based upon the function it serves within the context of this ordinance, the bulk of the provisions of this ordinance are unrelated to the content of the speech provided and allow maximum expressive potential to sign owners.

1202. AUTHORITY

This ordinance is enacted pursuant to Article IX, Section II, Paragraph IV of the Georgia Constitution of 1983, the Charter of the City of Griffin, the general police powers of Griffin and other authority provided by federal, state or local laws applicable hereto.

1203. DEFINITIONS.

As used in this ordinance, the following terms shall have the meanings respectively ascribed to them.

A-frame sign or easel sign: A portable sign consisting of two sign faces placed back to back and hinged together at the top in such a manner that each sign face leans toward the other, connecting at the top and forming a self-supporting structure.

Awning: A roof-like cover that projects from the wall of a building for the purpose of shielding a doorway, walkway, or window from the elements. Awnings are often made of fabric or flexible plastic supported by a rigid frame, and may be retracted into the face of the building.

Banner: A sign other than a flag, made of paper, cloth, thin plastic, or similar lightweight material and usually containing a message or logo.

Billboard: A sign with an area greater than 300 square feet which is supported by one or more columns, uprights, or braces in or upon the ground and is not attached to a building and is not mobile or temporary.

Building sign: A sign that in any manner is fastened to, projects from, or is placed or painted upon the exterior wall, window or door of a building. This includes lettering, pictures or other attention-getting devices attached or affixed to windows.

Building official: The officer or other designated authority charged with the administration and enforcement of this code, or duly authorized representative.

Business premises: A building, suite, office or other unit used for nonresidential purposes. In the case of businesses licensed by the City, the area occupied by a single business license holder shall be deemed as one (1) business premises. In the case of professionals paying individual taxes to the City, each professional corporation, partnership or other entity in which the professional participates shall be considered the occupant and all area occupied by that occupant shall be the business premises. For the purpose of this Ordinance, business premises shall include nonresidential space occupied by charitable organizations, political organizations, institutions or other noncommercial entities.

Business day: Any weekday (Monday through Friday) except for City of Griffin holidays or when the offices of the City of Griffin are closed due to a weather or other emergency.

Canopy: A roof-like structure supported by columns or projecting from a building and open on at least three sides.

Changeable copy sign: A sign that is capable of changing the position or format or word messages or other displays on the sign face or change the visible display of words, numbers, symbols and graphics by the use of a matrix of electric lamps, movable discs, movable panels, light apertures or other methods; provided these changes are actuated by either by a control mechanism or manually on the face of the sign. Such signs are also referred to as reader boards.

Directional sign: A sign used to give direction or specific instruction to the public, such as, but not limited to, "enter," "exit," "no parking," "drive through," "rest room," etc. Such signs shall contain only instructional information.

Easel sign: See "A-frame sign."

Election cycle: That period of time commencing with the announcement of candidacy and ending with the final determination of each ballot issue or successful candidate for office.

Feather banner: A banner made from lightweight material and attached to a pole and is design to wave in the wind.

Flag: A sign consisting of any fabric containing distinctive colors, patterns, logos, or symbols, such as a symbol of a government or any other entity or organization.

Freestanding sign: A sign, with an area of no more than 300 square feet and no less than four (4) square feet, which is supported by one or more columns, uprights, or braces in or upon the ground and is not attached to a building and is not mobile or temporary. The term "freestanding sign" includes but is not limited to the following:

- **a.** *Pole Sign.* A sign that is mounted on a freestanding pole or similar support such that the bottom of the sign face is at least six feet above the ground.
- **b.** *Ground Sign.* A freestanding sign, other that a pole sign, in which the bottom of the sign face is less than six feet above the ground but not directly in contact with the ground.
- **c.** *Monument sign:* A freestanding sign in which the entire bottom of the sign face is in contact with the ground, providing a solid and continuous background for the sign face from the ground to the top of the sign upon which background the sign face is mounted.

Frontage or street frontage: The width in linear feet of a lot where it abuts the right-of-way of any street from which access may be directly gained.

***Fronts or fronting on a street*:** A business "fronts" on a street when the lot line on the property on which the business is located also forms the line marking the edge of a publicly dedicated right-of-way.

Illuminated signs:

- **a.** *Internally-illuminated sign.* Any sign that is illuminated by an artificial light source from within the sign structure over any or all of its sign face.
- **b.** *Externally-illuminated sign.* Any sign that is partially or completely illuminated at any time by an artificial light source that directly or indirectly illuminates the face of the sign from outside the sign structure.

Parcel: The unit identified on county tax maps as a single lot for purposes of ad valorem taxation; provided, that two (2) or more adjoining lots owned by one (1) person or entity shall be deemed to be one (1) parcel for the purpose of these provisions.

Permanent subdivision sign: Signs that advertise residential, commercial and industrial sites developed as one project.

Portable sign:

- **a.** Any sign:
  - **1.** That is capable of being moved or intended to be moved from one location to another; or
  - **2.** That is considered a portable sign in the normal course of commerce, even though the sign may be temporarily affixed to the ground; or
  - **3.** That the design of which indicates it is capable of being moved or intended to be moved from one location to another; or
  - **4.** That is not permanently affixed to a building or the ground; or
  - **5.** That is used in such a manner as to be portable.
- **b.** Signs meeting the standards of the following categories shall not be considered portable signs:
  - **1.** Freestanding signs;
  - **2.** Building signs;
  - **3.** Monument signs;
  - **4.** Billboards;
  - **5.** Changeable copy sign.
- **c.** Removal of wheels, chassis or frame from a portable sign shall not result in a change of its classification.
- **d.** Vehicles regularly used in the course of business or that are driven to and from a place of business may contain information identifying the business on the vehicle and may be parked in lots serving the identified business, provided that such vehicle is regularly used

for transportation. Vehicles parked in commercial lots or on property located in the City for indefinite periods of time and not regularly used in the course of business that contain identifying information about a business shall be considered portable signs.

Roof sign: A sign erected upon and above a roof structure and wholly supported by the roof structure or a structure placed upon the roof. Roof signs shall also constitute any signage placed upon sloped building fascia intended to appear as or actually be roof elements of the building.

Shared sign: A sign that serves as common or collective use for a group of persons or businesses operating on the same parcel, such as, but not limited to, a shopping center or business park. Ownership of and responsibility for a shared sign shall remain with the owner of the building or buildings served by the sign.

Sign: Any structure, display, or device that is used to advertise, identify, direct, or attract attention to a business, institution, organization, person, idea, product, service, event or location by any means, including words, letters, figures, design characteristics, symbols, logos, fixtures, colors, movement or illumination.

Sign area (for freestanding signs):

a. The area of a sign structure shall be computed as the area within the smallest rectangle enclosing the limits of the surface of a sign whereon the sign face or sign face modules may be placed, including all portions of a sign structure that provide a background for the sign face and forming an integral part of the sign face. Portions of the sign structure that are not intended to contain any message or idea and are purely structural or decorative in nature are not included in the computation of sign area.

b. Any open space contained within the limits of the rectangle delimiting the sign face or sign face modules shall be included in the computation of the area of such sign face or sign face module.

c. For multi-faced signs, when the sign face surfaces are parallel (back-to-back), or where the interior angle formed by the faces is 45 degrees or less, the area of the sign shall be taken as the area on the largest side. For all other multi-faced signs, the area of the sign shall be the total area on all sides that can be viewed at one time from any angle.

Sign area (for building signs):

a. The area of a sign shall be computed as the area within the smallest rectangle enclosing the limits of a sign face, or the combination of the areas of all such rectangles delimiting each sign face module, together with any frame or material, texture, or color forming an integral part of the sign face or used to differentiate the sign face from the structure upon which it is placed.

b. The computation of the area of a sign face shall not include the structure, supports or uprights on which the sign face is placed or any portions of a sign structure that are not intended to contain any message or idea and are purely structural or decorative in nature, other than those ports contained within the rectangle that delimits the sign face or a sign face module.

c. For any sign on which the words, letters, figures, symbols, logos, fixtures, colors, or other design elements routinely change or are intended to be changed from time to time, the sign face area shall include the entire area within which any words, letters, figures, symbols, logos, fixtures, colors, or other design elements may be placed, together with any frame or material, texture, or color forming an integral part of the sign face or used to differentiate the sign face from the structure upon which it is placed.

Sign area (for monument signs): The computation of the sign area of a monument sign shall include only the surface area upon which any word, letters, figures, symbols, logos, fixtures, colors or other design elements occur as measured from the top to bottom and side to side (sign face).

Sign face: That portion of the surface of a sign structure where words, letters, figures, symbols, logos, fixtures, colors, or other design elements are or may be located in order to convey the message, idea, or intent for which the sign has been erected or placed. The sign face may be composed of two or more modules on the same surface that are separated or surrounded by portions of a sign structure not intended to contain any advertising message or idea and are purely structural or decorative in nature.

Sign height: The vertical distance to the highest point of a sign structure. The height is measured from the surface of the nearest adjacent street at a point on the roadway centerline nearest the sign.

***Sign plaza*:** A kiosk placed by the City or its agent on the right-of-way at major intersections of the municipal street system to direct the traveling public to subdivision entrances.

Special event sign: A temporary sign utilized in conjunction with and for the same time period as a valid special event permit.

Spectacular sign or device: Spectacular sign or device includes, but is not limited to, (i) any piece or strip of cloth, paper, canvas, plastic or similar material, including banners, but excluding flags, on which a message, slogan or emblem is painted, drawn or otherwise projected, colored or shaped for the purpose of advertising or drawing public attention; (ii) any advertising display, sign or copy that is animated; (iii) balloons, air and gas filled devices; (iv) streamers; or (v) other similar attention-getting devices.

Standard informational sign: A sign with an area not less than three (3) square feet but not more than fifteen 15 square feet, made for short-term use, containing no reflective elements, flags or projections, and which, when erected, stands at a height not greater than 30 inches, and is mounted on a stake or metal frame with a thickness or diameter not greater than one and one-half inches.

Temporary sign: A sign with an area not greater than three (3) square feet made for short-term use, containing no reflective elements, flags or projections, and which, when erected, stands at a height not greater than 30 inches, and is mounted on a stake or metal frame with a thickness or diameter not greater than one and one-half inches.

1204. APPLICABILITY

1204 A. The requirements of this ordinance shall apply to all properties in the City of Griffin, regardless of zoning district.

1204 B. The requirements of this ordinance shall apply to all signs that are visible from a street, public right-of-way, or property in public ownership.

1205. PROHIBITED SIGNS

1205 A. The following types of signs are prohibited:

1. Signs imitating warning signals; signs displaying lights resembling the flashing lights customarily used in traffic signals or in police, fire, ambulance or rescue vehicles; signs using words, slogans, dimensional shape or size, or colors of governmental traffic signs in such a manner as to be confused with official traffic signs.
2. Signs with lights flashing in series, lines, or rows, or otherwise animated; other than fixed changeable copy sign permitted by this article.
3. Flashing, blinking, or fluctuating signs; other than fixed changeable copy sign permitted by this article.
4. Signs attached to trees or utility poles or boxes; signs painted on or otherwise attached to rocks or other natural objects; signs, other than those placed by a local, state or federal government or utility company located within the public street right-of-way or within five (5) feet of the curb or closest edge of the pavement of any public street.
5. Signs emitting or utilizing in any manner any sound capable of being detected on a public road by a person of normal hearing.
6. Signs which obstruct any fire escape, any means of egress or ventilation, or prevent free passage from one part of a roof to any other part thereof; signs attached in any manner to any fire escape.
7. Banners, fringe, twirling, A-frame, sandwich-type, sidewalk or curb-type signs, balloons, streamers, portable display signs, air or gas filled figures and other similar temporary signs, except as permitted elsewhere.

8. Roof signs.
9. Signs displaying any statement, word, character or illustration of an obscene nature.
10. Illuminated signs from or to which direct rays of light are projected onto a lot other than on the lot where the illumination occurs.
11. Portable Changeable Copy Signs which are designed to display messages that can be changed electronically (LED) or manually.

1205 B. No sign otherwise prohibited by this ordinance shall be installed within a building in such a manner that is visible from the public right-of-way

1206. PERMITS; PROCEDURES

1206 A. Unless specifically exempted from obtaining a permit under provisions of this ordinance, no person shall erect, construct, replace, relocate or structurally alter any sign within the City without first obtaining a sign permit from the Building Official. No permit shall be required to repaint or change the lettering of an existing conforming sign, provided that no change of ownership of the entity displaying the message thereon has been made.

1206 B. Applications for permits shall be made upon forms provided by the City and shall contain or have attached thereto the following information:

1. Name, address and telephone number of the applicant.
2. Address of building, structure, or lot to which or upon which the sign is to be attached or erected.
3. One accurate drawing showing the position of the sign in relation to nearby buildings or structures, including other signs, driveways, parking areas, and any other limiting site features (survey not required).
4. One accurate drawing of the plans, specifications and method of construction and attachment of the sign to the building or ground. Such drawings shall include the size of the sign area, overall height of the sign, location of the sign installation and its relation to existing rights-of-way and all driveways, and, if a freestanding or monument sign, any protective devices or landscaping around the base of the sign.
5. Name, address and telephone numbers of person erecting the sign.
6. Written consent of the owner, manager, leasing agent or lessee of the building or land to which or upon which the sign is to be erected.
7. The location and size of all other signs on the parcel upon which the sign is to be erected.
8. The size of the parcel on which the sign is to be erected and the length of the street frontage for the street to which the sign is oriented.
9. If the sign is to be lighted, an application for electrical permit meeting all standards of the City's electrical code.
10. Such other information as the City shall require, showing full compliance with this and other ordinances of the City.

1206 C. For signs shared by more than one person or entity, the property owner or sign contractor shall secure a permit for the sign structure and the property owner shall be responsible for the maintenance of the structure as well as for removal of individual sign panels identifying uses which no longer exist within the building or buildings covered by the shared sign. In addition to the permit required for a shared sign structure, a separate permit shall be required for each panel, which shall be obtained by the owner, his tenant, an authorized agent, or the sign contractor.

1206 D. Fees for permits shall be as fixed from time to time by Resolution of the Board of Commissioners.

1206 E. Upon the filing of an application for a permit and the payment of all necessary fees, the Building Official shall examine all plans and specifications submitted, including

electrical wiring and connections, and the premises upon which the sign is proposed to be erected. Such review shall be completed within thirty (30) business days of submission of a completed sign application, unless specific circumstances arise requiring additional time to process the application. If such additional time is needed by the Building Official, the person or entity submitting the application will be notified in writing of the reason for the delay and the anticipated processing date. If it appears from review of the permit application and the site that the proposed sign is in compliance with the requirements of this ordinance and all other ordinances and laws of the City, the Building Official shall issue a permit no later than thirty (30) business days from receipt of the completed application.

1206 F. The City shall deny permits to applicants who submit applications for signs that do not comply with the provisions of this ordinance, are incomplete, or contain any material false statements. Violation of any provision of this ordinance will be grounds for terminating a permit granted by the City for the erection of a sign. Should it be determined that a sign permit was issued pursuant to an incomplete application or an application containing a false material statement, or that a permit has been erroneously issued in violation of this ordinance, the Building Official shall revoke the permit. Should the Building Official deny a permit, the reasons for denial shall be stated in writing and mailed by certified mail, return receipt requested, to the address on the permit application on or before thirty (30) business days after the City received the application. Alternatively, the City may personally serve the sign applicant with a copy of the written notice of denial within thirty (30) business days after the City's receipt of the application. Any application denied and later resubmitted shall be deemed to have been submitted on the date of resubmission, instead of the date of the original submission.

1206 G. No properly issued permit shall be revoked except for due cause as hereinafter defined, and after the applicant is given ten (10) business days written notice containing a statement of the reasons for the revocation of a permit. "Due cause" is the violation of any provision of this ordinance or other applicable ordinances, state or federal law.

1206 H. An individual whose permit application has been denied or a permittee whose permit has been revoked may appeal the decision to the Board of Commissioners, provided such appellant files a written notice of appeal with the City Manager within ten (10) business days of the Building Official's notice. Such appeal shall be considered by the Commission at the next commission meeting held after the City's receipt of the written notice of appeal, provided that such notice of appeal is received a minimum of five (5) business days before the next meeting. Appeal notices received less than five (5) business days prior to a scheduled Commission meeting shall be heard at the next available meeting more than five (5) business days following receipt of appeal. The Board of Commissioners shall issue a written decision to the applicant no later than thirty (30) calendar days following the close of the appeal hearing. Decisions of the Board of Commissioners to affirm the decision of the Building Official or to overrule the decision of the Building Official and grant or continue the permit for which appeal is taken shall be reduced to writing and served upon the applicant in the same manner as the original notice to deny or notice of revocation. Such decision shall constitute a final determination by the City of Griffin.

1206 I. Any person commencing work on a sign before securing the necessary permit from the Building Official shall be subject to double permit fees under the permit fee schedule

1207. PERMIT EXPIRATION

A sign permit shall become null and void if the sign for which the permit was issued has not been completed and installed within three (3) months after the date of issuance. No refunds will be made of permit fees for permits that expire due to failure to erect a permitted sign; provided that where an applicant can demonstrate that a commercial entity was timely engaged to construct the permitted sign but the fabrication has not yet been completed, one ninety (90) day extension may be granted by the Building Official on the duration of the permit. Where a permit has expired for failure to erect the sign, if an individual later desires to erect a sign at the same location, a new application must be processed and another fee paid in accordance with the fee schedule in effect at the time of resubmission.

1208. DISPLAY OF PERMIT

The owner of the sign shall be responsible for maintaining the permit for every sign constructed, erected or maintained for which a permit is required by this ordinance. Such permit shall be kept on the premises served by the sign and shall be exhibited promptly upon request of city officers and employees.

1209. COMPLIANCE WITH TECHNICAL CODES; ZONING

1209 A. All signs hereafter erected, replaced, reconstructed, altered, relocated or modified within the City shall conform with all applicable requirements of the statewide minimum construction codes and any optional codes, adopted by the City. Where the provisions of such codes and this ordinance conflict or overlap, the most stringent requirement shall prevail and be controlling.

1209 B. All signs hereafter erected, replaced, reconstructed, repaired, altered or relocated within the City shall conform to the zoning ordinance of the City. In the event of conflict between the provisions of this ordinance and the zoning ordinance, the most stringent requirement shall prevail and be controlling.

1210. REGULATION OF SIGNS BY LAND USE; DEVELOPED RESIDENTIAL PROPERTY

1210 A. This Section governs any developed residential property other than residential property zoned multi-family residential under the City's Zoning Ordinance

1210 B. Owners of property governed by this Section may post only such signs as are authorized by this section and shall comply with the following requirements:

1. *Freestanding signs, wall signs*. Such property may contain not more than one freestanding sign or wall sign, with permit, the sign area of which may be not greater than sixteen (16) square feet. Any ground sign shall be six (6) feet in height or shorter and shall be setback so that it is located entirely on private property and no closer than ten (10) feet from the back of the curb or from the edge of the pavement on streets with no curbing. Signs shall not project over property lines. Provided however, that an unlimited number of freestanding signs not exceeding the size and height limits provided above are allowed during an election cycle. No fee and no permit are required for such additional freestanding signs during election cycles.

2. *Standard informational signs*. In addition to any other signs authorized by this section, such property may contain standard informational signs, without a permit or fee, located so that they are located entirely on private property and no closer than ten (10) feet to the back of the curb or from the edge of the pavement on streets with no curbing, as follows:

a. Except as provided in subparagraphs b. below, not more than one standard informational sign;

b. An unlimited number of standard informational signs are allowed during an election cycle, and a permit shall not be required for the same;

c. Where no standard informational sign may be posted in the yard due to lack of a front yard deep enough to meet this standard, such standard informational sign may be posted in a window of the premises.

3. *Permanent subdivision signs*. In addition to any other signs authorized by this section, if such property is located at the entrance to any residential subdivision, then such property may contain no more than two permanent subdivision signs per entrance.

1211. REGULATION OF SIGNS BY LAND USE; OTHER DEVELOPED PROPERTY

This section governs properties which are zoned multi-family residential, and any developed property which is zoned for any commercial, office or industrial use., other than properties located within the Downtown Commercial Historic District or on an Emerging Commercial Corridor. All such properties may post only such signs as are authorized by this section. All signs not expressly authorized by this Section are prohibited on such properties. Authorized signs shall comply with the following requirements:

1211 A. *Freestanding signs*. Such property may contain one or more freestanding signs in accordance with the following.

1. Except for regulatory signs approved and erected by appropriate federal, state or local authorities, or public utilities, no signs shall be constructed, erected or maintained closer than ten (10) feet from the curb or pavement edge on streets with no curb and shall be installed completely on private property. No free standing sign shall be erected within ten (10) feet of the nearest point of the public right-of-way at the intersection of two or more streets.

2. Where signs are erected at the same elevation as electrical power lines, the minimal horizontal distance from such power lines to the sign shall be ten (10) feet.

3. Only one freestanding sign per platted lot shall be allowed along the right-of-way, provided that for business premises fronting on more than one street, one freestanding sign shall be allowed along no more than two (2) right-of-way frontages.

4. All freestanding signs shall be surrounded by protective concrete curbing if in a paved area or shall be placed in a landscaped area. No freestanding sign shall be permitted to encroach in a parking area to such extent that the remaining parking spaces fail to meet the minimum standards of the zoning ordinance for off-street parking.

5. Freestanding signs shall be erected to a height of no more than twenty-four (24) feet, provided that planned centers (including both shopping centers and business parks) covering ten (10) acres or more may erect one freestanding sign to a height of thirty (30) feet. All sign heights shall be measured from the grade level of the nearest adjacent street from which the sign is visible. The level of the ground shall not be altered in any way so as to provide additional sign height. All freestanding signs shall have an unobstructed visual clearance exclusive of supports of not less than eight (8) feet.

6. The maximum sign area of any sign, inclusive of any border and trim but excluding the base, apron, supports and other structural members shall be:

a. Freestanding signs, including shared signs, on parcels of ten (10) acres or more in size, three hundred (300) square feet in sign area.

b. Shared freestanding signs on parcels of three (3) acres or more but less than ten (10) acres, two hundred-twenty (220) square feet in sign area.

c. Shared freestanding signs on parcels less than three (3) acres, one hundred-sixty (160) square feet in sign area.

d. Freestanding signs for single business premises on parcels of three (3) acres or more but less than ten (10) acres in size, one hundred-forty (140) square feet in sign area.

e. Freestanding signs for single business premises on parcels of less than three (3) acres in size, eighty (80) square feet in sign area, which may be increased to one hundred-twenty (120) square feet on divided highways.

7. *Exceptions* - Exceptions to the size restrictions for shared signs may be made by the City Manager upon petition by the property owner where it is determined that the number of tenants to be served by the sign are such that individual sign panels would measure less than four and one-half (4 ½) square feet each.

   Exception to the size limits shall be limited to the maximum relief necessary to allow such individual sign panels at a size of four and one-half (4 1/2) square feet.

8. Drive thru menu boards. In addition to any other freestanding signs authorized by this Section, if such property contains a business premises where materials are delivered at a drive thru delivery point other than on the front side of the building, then one additional freestanding sign per delivery point shall be allowed to be located on the property in the side or rear yard; no such sign shall exceed thirty two (32) square feet in sign area nor eight (8) feet in height at the highest point.

1211 B. *Building signs*. Fifteen (15%) percent of the square footage of the business premises façade (including signage on glass windows and doors) may have building signs affixed thereto, provided that any business premises may erect one building sign of at least six (6) square feet. Business premises may use a combination of signs as building signs. No individual building sign or combination of building signs shall exceed two hundred-twenty (220) square feet per business premises. Projecting signs attached to a building may extend over pedestrian portions of a public right-of-way not more than eighteen (18) inches from the surface of the building; provided that such signs shall not extend over paved portions of the roadway.

1211 C. *Changeable copy signs* are permitted as an integral part of freestanding and wall signs in commercial, office and industrial zoning districts, subject to the following:

1. The changeable copy portion of the sign shall not exceed thirty percent (30%) of the overall sign area of the sign to which it is attached.
2. The total display area of the combined sign (freestanding or wall sign plus changeable copy board) shall not exceed the overall size limitations imposed by this ordinance by more than one hundred-thirty (130%) percent.
3. Changeable copy signs erected in combination with freestanding or wall signs must be on the same pole, post or standard or within the same frame as the principal sign.
4. LED displays on changeable copy signs shall not flash nor simulate movement. Color and copy changes shall not occur more often than one (1) time per minute.

1211 D. *Monument signs* may be erected in lieu of freestanding signs at the option of the sign owner. Such monument signs shall conform to all setback requirements for freestanding signs. The maximum sign area of any monument sign, inclusive of any border and trim but excluding the base, apron, supports and other structural members shall be:

1. Shared monument signs as part of a planned center (including both shopping centers and business parks) on parcels ten (10) acres or more in size, one hundred twenty-five (125) square feet in sign area, fifteen (15) feet in height.
2. Shared monument signs on parcels three (3) acres or more but less than ten (10) acres, one hundred (100) square feet in sign area, twelve (12) feet in height.
3. Shared monument signs on parcels less than three (3) acres, ninety (90) square feet in sign area, ten (10) feet in height.
4. Monument signs for single business premises on parcels of three (3) acres or more, eighty (80) square feet in sign area, ten (10) feet in height.
5. Monument signs for single business premises on parcels of less than three (3) acres in size, sixty (60) square feet in sign area, eight (8) feet in height.
6. Monument sign structures shall not exceed one-and-a-half (1.5) times the sign area for all monument signs.

1211 E. *Standard informational signs*. In addition to any other sign authorized by this Section, such property may contain standard informational signs without a permit or fee, located so that the sign is located completely on private property and the support is

no closer than ten (10) feet to the back of the curb or from the edge of the pavement on streets with no curbing, and no part of the placard is closer than ten (10) feet to the back of the curb or from the edge of the pavement on streets with no curbing, as follows:

1. Except as provided in Subparagraph 2 below, not more than one standard information sign is allowed.
2. An unlimited number of standard informational signs are allowed during an election cycle.
3. In addition to the regular standard information sign, properties zoned for industrial use with building(s) over 10,000 square feet and or located on 2 or more acres will be allowed signs 32 square feet but not greater than 50 square feet.

1211 F. *Permanent subdivision signs*. In addition to any other signs authorized by this Section, if any parcel is located at the entrance to any subdivision, then that parcel may contain not more than one permanent subdivision sign.

1211 G. *Directional signs*. In addition to any other signs authorized by this Section, any such property may contain not more than two directional signs per driveway entrance. Such signs are limited to no more than two (2) square feet in height and no more than two (2) square feet in sign area.

1211 H. *Special Event signs*. In addition to any other signs authorized by this Section, any such property may contain temporary signs in accordance with Section 1215 (Special Event Permits).

1211 I. *Billboards*. In lieu of other freestanding signs authorized by this code, any such property may contain one billboard which complies with the following:

1. Billboards are allowed on parcels fronting state or federal highways in commercial and industrial districts only. Such billboards are limited to four hundred-eighty (480) square feet in sign area with dimensions not exceeding twelve (12) feet in height or forty-two (42) feet in width.
2. Billboards are allowed on parcels adjacent to streets other than state or federal highways in commercial and industrial districts only. Such billboards are limited to three hundred ten (310) square feet in sign area per face, with dimensions not exceeding twelve (12) feet in height and twenty-five (25) feet in width.
3. Billboards shall be erected to a height of no more than fifty (50) feet where located adjacent to state and federal highways and no more than thirty (30) feet when located adjacent to other streets.
4. All portions of a sign face and support members of any billboard shall be setback from all buildings, structures and property lines at least seventy-five (75) feet.
5. Illumination. All illuminated billboards shall use base mounted fluorescent or mercury vapor lights and shall be activated by photoelectric cells. Additional lighting, including but not limited to, neon, animation and running lights, is prohibited.
6. Extrusions prohibited. Extrusions beyond the face of any billboard, excluding aprons, are prohibited.
7. Location and number of signs. Only one billboard shall be allowed per platted lot. Billboards shall be no less than one thousand (1,000) feet apart, measuring from the two closest points and only one (1) sign face shall be allowed to face the same direction per location. This allows back to back or "V" formation signs but prohibits two signs side by side or over and under, facing the same direction.

1212. REGULATION OF SIGNS BY LAND USE; VACANT AND UNDEVELOPED PROPERTY

Any property (i) located outside the Downtown Commercial Historic District, which is not occupied on a regular basis, even if attached to occupied property, and (ii) any property wherever located which is not developed property, may contain only those

signs authorized by this Section, except during an election cycle as provided herein. Vacant and undeveloped property shall comply with the following requirements:

1212 A. Freestanding signs.

Such property may contain one or more freestanding signs in accordance with the following:

1. *Number of signs; sign area.* One freestanding sign limited to seventy-five (75) square feet of sign area is allowed with a permit. Provided, however, that an unlimited number of freestanding signs with faces of twenty (20) square feet or less and six (6) feet in height or shorter are allowed during an election cycle and no permit shall be required for the same.
2. *Encroachment, required setbacks.* Freestanding signs may be erected only on private property and shall be located no closer than ten (10) feet from the back of the curb or from the edge of the pavement on streets with no curbing. Signs shall not project over property lines.
3. *Height restrictions.* The height of any freestanding sign at its highest point above the grade of the adjacent street shall not exceed fifteen (15) feet.

1212 B. Standard informational signs.

In addition to any other sign authorized by this Section, such property may contain standard informational signs, without a permit or fee, located so that the signs are erected entirely on private property and are not closer than ten (10) feet to the back of the curb or from the edge of the pavement on streets with no curbing, as follows:

1. Except as provided in Subparagraph 2 below, no more than one standard information sign is allowed.
2. An unlimited number of standard informational signs are allowed during an election cycle and no permit shall be required for the same.

1212 C. Billboards.

In lieu of other freestanding signs authorized by Subsection 1 below, any such property located in a commercial or industrial district may contain one billboard which complies with the following:

1. Billboards are allowed on parcels fronting state or federal highways in commercial and industrial districts only. Such billboards are limited to four hundred-eighty (480) square feet in sign area with dimensions not exceeding twelve (12) feet in height and forty-two (42) feet in width.
2. Billboards are allowed on parcels adjacent to streets other than state or federal highways in commercial and industrial districts only. Such billboards are limited to three hundred ten (310) square feet in sign area per face, with dimensions not exceeding twelve (12) feet in height and twenty-five (25) feet in width.
3. Billboards shall be erected to a height of no more than fifty (50) feet where located adjacent to state and federal highways and no more than thirty (30) feet when located adjacent to other streets.
4. All portions of a sign face and support members of any billboard shall be setback from all buildings, structures and property lines at least seventy-five (75) feet.
5. Illumination. All illuminated billboards shall use base mounted fluorescent or mercury vapor lights and shall be activated by photoelectric cells. Additional lighting, including but not limited to neon, animation or running lights, is prohibited.
6. Extrusions prohibited. Extrusions beyond the face of any billboard, excluding aprons, are prohibited.
7. Location and number of signs. Only one billboard shall be allowed per platted lot. No billboard shall be placed on any lot which contains any freestanding sign. Billboards shall be no less than one thousand (1,000) feet apart, measuring from the two closest points and only one (1) sign face shall be allowed to face the same direction per location. This allows back to back or "V" formation signs but prohibits two signs side by side or over and under, facing the same direction.

1213. REGULATION OF SIGNS BY LAND USE; DOWNTOWN COMMERCIAL HISTORIC DISTRICT

1213 A. The Griffin Downtown Commercial Historic District is identified as that area designated on the National Register of Historic Places and bounded on the north by Broad Street, on the east by Sixth Street, on the south by Poplar Street, and on the west by Eighth Street.

1213 B. *Signs authorized.* Any property located in the Downtown Commercial Historic District may post only such signs as are authorized by this Section and shall comply with the following requirements:

1. *Historic pole signs*. Such property may contain one or more historic pole signs in accordance with the following.

a. *Number of signs; sign area.* One historic pole sign limited to sixteen (16) square feet of sign area or one square foot per linear foot of lot frontage, whichever is less, shall be allowed for each street frontage only to the extent that such property includes sufficient land that the freestanding sign can be erected free and clear of the public right-of-way and no closer than ten (10) feet to said right-of-way. Any planned commercial center may have one freestanding sign limited to one hundred (100) square feet of sign area for each street frontage. No separate freestanding sign other than that permitted in this subsection will be allowed for an individual business in a planned commercial center. No freestanding sign shall be closer than two hundred-fifty (250) feet to any other freestanding sign on any property, as measured from the closest point of each side. Provided however, that an unlimited number of freestanding signs with signs faces of twenty (20) square feet or less and six (6) feet in height or shorter are allowed during an election cycle and no permit shall be required for the same.

b. *Encroachment, required setbacks.* Freestanding signs may encroach into front and side yards provided that they are located entirely on private property and are located no closer than ten (10) feet from the back of the curb or from the edge of the pavement of a street with no curbing. Signs shall not project over property lines.

c. *Height restrictions.* The height of all freestanding signs at their highest point shall not exceed twenty-two (22) feet above the grade of the adjacent street.

2. *Building signs*. In addition to any other signs authorized by this Section, such property may contain no more than two (2) building signs per building façade for each occupancy, provided that the total area for all building signs on any building façade shall not exceed twenty-five (25%) percent of the total area of the wall on that frontage. Such property may contain not more than one wall sign that includes a reader board of not more than six (6) square feet in area. No wall sign may project more than four (4) inches from the wall adjacent to a public sidewalk. No protruding wall sign shall be placed closer than twelve (12) inches to any other protruding wall sign.

3. *Standard informational signs*. In addition to any other sign authorized by this Section, such property may contain standard informational signs, without a permit or fee, so long as the sign area is less than 16 square feet, located so that the sign is located entirely on private property, as follows:

a. Except as provided in Subparagraph b. below, not more than one standard informational sign is allowed.

b. An unlimited number of standard informational signs are allowed during an election cycle and no permit shall be required for the same.

c. All signs over 16 square feet shall be required to seek a permit from the Planning and Development Department.

4. *Directional signs*. In addition to any other signs authorized by this Section, any such property may contain not more than two directional signs per driveway entrance, such signs to be erected to a height no more than two (2) feet and to a size of no more than one and one half (1 ½) square feet.

5. *Temporary signs*. In addition to any other signs authorized by this Section, any such property may contain temporary signs as permitted in Section 1215.

6. *Canopy signs*. In lieu of other building signs authorized by this ordinance, any such property may contain no more than one canopy sign. No canopy sign shall be greater than sixteen (16) square feet in sign area. No canopy sign shall hang lower than seven feet or eighty four (84) inches from the ground at its lowest point. No canopy sign shall be installed without adequate mounting and assembly approved by the Building Official. All canopy signs shall be required to meet the standards of ANSI and ADA.

7. *A-frame or easel signs*. Any such property that is not served by a freestanding sign may utilize not more than one A-frame or easel sign per street frontage, each face of which shall have an area of not more than ten (10) square feet. No A-frame or easel sign shall be placed on any public sidewalk so as to leave less than five (5) feet of clearance for pedestrians. No A-frame or easel sign shall remain on any public sidewalk adjacent to any premises at any time when the premises are closed to the public. All A-frame and easel signs shall be adequately weighted or anchored to prevent accidental movement of the sign and obstruction of any public street.

8. *Prohibited signs*. The following signs are prohibited within the Downtown Commercial Historic District, unless specifically permitted as a temporary sign:

- **a.** Billboards.
- **b.** Drive-thru menu boards.
- **c.** Permanent subdivision signs.
- **d.** Banners, pennants and streamers along or across road rights-of-way, except banners erected by a governmental authority.
- **e.** Folding signs, portable display signs or similar moveable signs other than A-frame or easel signs as permitted in Subsection 7 above.
- **f.** Signs erected on or located on any street or public right-of-way, curbs, curbstone, hydrant, lamp post, trees, barricade, temporary walk, or public utility poles, except signs erected by or at the direction of a governmental authority.
- **g.** Signs with revolving or rotating beams of light.
- **h.** Rotating signs.
- **i.** Signs placed upon a structure in any manner so as to disfigure or conceal any window opening, door or significant architectural feature or detail of any building.

9. *Historic character signs*.

- **a.** The following signs have historically been associated with the downtown area and are in keeping with its character as an historic district:
  - **i.** Barber poles;
  - **ii.** Time and temperature displays;
  - **iii.** Chalkboard;
  - **iv.** Historic Preservation Plaques.
- b. Such historic signs are authorized as legal nonconforming uses and are governed by Section 1218.

1214. REGULATION OF SIGNS BY LAND USE: EMERGING COMMERCIAL CORRIDORS

1214 A. The City of Griffin contains a number of Emerging Commercial Corridors. Structures along these streets were once occupied as residential properties but are in the process of conversion to office or professional use. Due to the proximity of these nonresidential structures to existing residential areas and the residential character of their original construction, as well as the potential for significant blight (as identified by O.C.G.A. § 22-1-1) to develop if signage is not strictly controlled, unique regulation of signage is appropriate for protection of remaining residential properties.

1214 B. The Emerging Commercial Corridors are defined as follows:

1. Solomon Street, from 18th Street in the west to 1st Street in the east;
2. Poplar Street, from 18th Street in the west to 3rd Street in the east;

3. College Street, from 12th Street in the west to 5th Street in the east;
4. South 8th Street, from Taylor Street in the north to South Hill Street in the south;
5. North Hill Street, from Georgia Avenue in the north to East Broadway Street in the south;
6. South Hill Street, from Taylor Street in the north to Oak Street in the south.

1214 C. *Signs authorized.* Any property located in an Emerging Commercial Corridor may post only such signs as are authorized by this Section and shall comply with the following requirements:

1. *Ground signs*. Each property may contain one (1) ground sign in accordance with the following:
   a. Number of signs, sign area. One ground sign limited to twelve (12) square feet of sign area shall be allowed for each street frontage only to the extent that such property includes sufficient land that the freestanding sign can be erected free and clear of the public right-of-way and no closer than ten (10) feet to curb or edge of pavement.

      If a commercial structure is constructed or existing and is 5,000 square feet or larger then, reference Article 1211A or 1211D.
   b. Encroachment, required setbacks. Ground signs may encroach into front and side yards provided that they are located entirely on private property and are located no closer than ten (10) feet from the back of the curb or from the edge of the pavement of a street with no curbing. Signs shall not project over property lines.
   c. Height restrictions. The height of all ground signs at their highest point shall not exceed six (6) feet above the grade of the adjacent street.
2. *Building signs*. In addition to any other signs authorized by this Section, such property may contain no more than one (1) building signs per building façade, limited to no more than six (6) square feet in sign area. No reader boards shall be permitted. No wall sign may project more than four (4) inches from the wall. If a commercial structure is constructed or existing and is 5,000 square feet or larger then, reference Article 1211B.
3. *Standard informational signs*. In addition to any other sign authorized by this Section, such property may contain standard information signs, without a permit or fee, located so that the sign is located entirely on private property and no sign is closer than ten (10) feet to the back of the curb or from the edge of the pavement on streets with no curbing, as follows:
   a. Except as provided in Subparagraph b. below, not more than one standard informational sign is allowed.
   b. An unlimited number of standard information signs are allowed during an election cycle and no permit shall be required for the same.
4. *Prohibited signs*. The following signs are prohibited within the Emerging Commercial Corridors:
   a. Billboards.
   b. Drive-thru menu boards.
   c. Permanent subdivision signs.
   d. Banners, pennants and streamers along or across road rights-of-way, except banners erected by governmental authority.
   e. Folding signs, portable display signs or similar moveable signs.
   f. Signs erected on or located on any street or public right-of-way, curbs, curbstone, hydrant, lamp post, trees, barricade, temporary walk, or public utility

poles, except signs erected by or at the direction of the governmental authority.

g. Signs with revolving or rotating beams of light.

h. Rotating signs.

i. Signs placed upon a structure in any manner so as to disfigure or conceal any window opening, door or significant architectural feature or detail or any building."

(Amended 4-23-13)

1215. SPECIAL EVENT PERMITS

Properties in the Downtown Historic, Commercial, Neighborhood Business, Office and Industrial districts may erect window signs and spectacular signs and devices inside the building housing the premises without first obtaining a permit; provided that when such sign or device is erected inside a window visible from outside the building, the display area of the sign shall not exceed thirty percent (30%) of the total window surface, and the sign shall not remain in place longer than thirty (30) days.

All other special event signage, including portable signs and spectacular signs and devices shall be displayed only by permit under the following conditions and requirements:

1215 A. Prior to display of a special event sign, an application for a permit shall be filed with the Building Official. One permit shall be issued to cover all signs and devices during the period of permit coverage. Handling of permit requests shall conform to Section 6. All signs and devices to be covered by the permit shall be specifically described as to their construction and/or composition and location on the business premises.

1215 B. The maximum size allowed for the total of all window signs to be displayed under the permit shall be one hundred-fifty (150) square feet.

The maximum size allowed for the total of all banners/feather banners signs to be displayed under the permit shall be seventy (70) square feet. The maximum size allowed for the total of all spectacular signs shall be three hundred (300) square feet.

1215 C. Spectacular signs may be attached to the exterior wall or walls of the building or securely attached to the roof, but shall not be placed on or located so as to obstruct the public right-of-way. Portable signs may be located within parking areas of the business premises (but not upon the right-of-way), provided minimum standards for all off-street parking are maintained.

1215 D. The maximum number of special event permits to be issued to a single premises shall be four (4) per year for a period of time not to exceed thirty (30) days for each permit issued. No more than one special event permit shall be issued per calendar quarter per business premises.

1215 E. Except as modified by this Section all special event signs or devices must comply with all other applicable regulations and conditions set forth in this ordinance governing their usage.

1216. ERECTING SIGNS WITHOUT PROPER CONSENT

1216 A. No person shall place, print, nail, tack or otherwise fasten any sign, card, banner, hand built sign, poster, advertisement or notice of any kind, or cause the same to be done, on public right of way or on any private property without first obtaining the written consent of the owner of such property or its lawfully designated agent.

1216 B. No person shall willfully or intentionally construct, erect, operate, use or maintain any sign within the City in violation of this ordinance. A violation of this Section, upon conviction before the Municipal Court, shall be punished by a fine not to exceed Five Hundred Dollars ($500.00).

1217. EXCEPTION TO PERMIT PROVISIONS

The permit requirements of this ordinance shall not apply to the following, provided that the signs or devices erected or placed are located on property of the person who erects such signs or on property whose owner has given written permission for such placement.

1217 A. Flags of a size not exceeding four (4) feet by six (6) feet attached to a pole mounted directly onto a residence, business or commercial structure, not to exceed two (2) per premises, or one (1) flag not exceeding 48 square feet mounted on an independent flagpole installed directly into the ground.

1217 B. Any sign erected or permitted by or at the direction of any government entity on public property that it owns, controls or maintains.

1217 C. Seasonal or holiday decorations erected on either public or private property.

1217 D. Identification plates for doors not exceeding four (4) inches by eighteen (18) inches in size.

1217 E. Building numerals designating property numbering of a building or premises, such numerals not to exceed a height of six (6) inches on residential property or a height not exceeding twelve (12) inches on commercial, office or industrial property.

1217 F. Additional freestanding signs as allowed during election cycles as described in Section 1210 through 1214.

1217 G. Standard informational signs meeting the standards of this ordinance.

1217 H. Alarm system signs not exceeding six (6) inches by six (6) inches.

1218. NON-CONFORMING SIGNS.

Signs that, on the effective date of this ordinance, were approved and legally erected under previous sign restrictions, and that became or have become non-conforming with respect to the requirements of this ordinance, may continue in existence subject to the remaining provisions of this Section.

1218 A. No increase in size of the non-conforming sign shall be permitted.

1218 B. Existing signs which were legally erected but which have become non-conforming and which do not meet the setback requirements of this ordinance due to road widening should be moved to meet the setback requirement of this ordinance but shall not be increased in size, shape or changed in any manner except as to become conforming.

1218 C. In all zoning districts, signs shall be removed which:

1. Were illegally erected or maintained with respect to prior ordinances.
2. Are made of paper, cloth or non-durable materials (except standard informational signs); or
3. Are located in the public right-of-way, except as permitted by this ordinance.

It shall be the duty of the property owner to remove any signs illegally erected upon or improperly maintained upon its property in violation of this ordinance. Continued maintenance of an illegal or improperly maintained sign shall constitute a nuisance and be subject to abatement in accordance with the provisions of Code of Griffin, Georgia, Chapter 42, Article II. Upon failure to comply with any requirement of an Order entered by the Municipal Court, the

Building Official or his authorized agent may cause the removal of such sign at the expense of the owner.

4. A non-conforming sign shall not be replaced by another non-conforming sign, except that the substitution or interchange of poster panels, painted boards or de-mountable material on non-conforming signs shall be permitted.

5. Minor repairs and maintenance of non-conforming signs such as electrical repairs or lettering repair shall be allowed. However, no structural repairs or changes in the size or shape of the sign shall be permitted except to make the sign comply with the requirements of this ordinance. However, signs damaged by fire or act of God must be comply with the City's current signage ordinance at the time of rebuilding unless compliance would prevent the sign from being rebuilt, in which case the sign may be restored to its original condition.

6. Each non-conforming sign shall be registered within ninety (90) days of the enactment of this ordinance by the sign owner, and if it is determined that such non-conforming sign was legally erected under a prior ordinance, then a sign permit shall be issued to the sign owner without charge and the sign shall be marked with a permit decal. Should the owner of a non-conforming sign fail to register such sign within ninety (90) days from the enactment of this ordinance, such failure to register shall be deemed a violation of this ordinance, and such person shall be subject to citation in Municipal Court. For purposes of this subsection, publication of an announcement of the enactment of this ordinance as a legal advertisement in The Griffin Daily News shall be deemed sufficient notice to property owners of this requirement.

7. Existing signs on the property of newly annexed territory that were legally erected under the county ordinance which would become non-conforming under this ordinance upon annexation by the City shall be allowed to remain, provided such sign shall be registered with the City within ninety (90) days of annexation.

1219. INSPECTIONS.

The Building Official shall periodically inspect each permanent and temporary conforming and non-conforming sign in an attempt to ascertain whether the same is secure or insecure, and whether it is in compliance with the requirements of this ordinance or in need of repair. Responsibility for the safety of signs and security of their attachment or erection remains at all times with the sign owner.

1220. SIGNS REQUIRING REMOVAL.

1220 A. *Traffic hazards*. Any sign constituting a traffic hazard or a menace to the motoring public or pedestrians, as determined by the Building Official in consultation with the Chief of Police, shall be removed as provided in Section 1221.

1220 B. *General maintenance*. Every sign, including those signs for which permits are required and those for which no permits or permit fees are required shall be maintained in a safe, presentable and good structural condition at all times. The sign owner shall be responsible for repair or replacement of defective parts, painting, repainting, cleaning and other acts required for the maintenance of the sign. If the sign is not made to comply with adequate safety and maintenance standards, the Building Official shall require its removal in accordance with Section 1221.

1220 C. *Abandoned signs*. Except as otherwise provided in this ordinance, any sign that is located on property that becomes vacant and unoccupied for a period of three (3) months or longer, or any sign which pertains to a time, event or purpose which no longer applies, shall be deemed to have been abandoned. Permanent signs applicable to a business temporarily suspended because of a change of ownership or management of such business shall not be deemed abandoned unless the property remains vacant for a period of six (6) months or more. Sign panels from abandoned

signs shall be removed by the owner of the premises on which the sign is located within the time frame specified in this Subsection. The supporting structure of an abandoned sign shall be subject to the non-conforming use provisions of Section 1218.

1220 D. *Dangerous or defective signs*. No person shall maintain or permit to be maintained on any premises owned or controlled by that person any sign that is in a dangerous or defective condition. Any such sign shall be removed or repaired by the owner of the premises or owner of the sign. Upon failure of the owner to remove or repair a dangerous or defective sign, the Building Official shall proceed as described in Section 1221.

1220 E. *Unlawful signs*. No person shall erect or permit to be erected any sign that does not comply with the provisions of this ordinance.

1221. REMOVAL PROCEDURE.

1221 A. The Building Official shall cause to be removed any sign that he determines endangers the public safety, such as an abandoned, dangerous, or electrically or structurally defective sign or a sign for which no permit has been issued or which is otherwise in violation of this ordinance. The Building Official shall prepare a written notice that shall describe the sign and specify the violation involved. The notice shall state that if the sign is not removed or the violation is not corrected within twenty (20) calendar days, the sign shall be removed in accordance with the provisions of this Section.

1221 B. All notices by the Building Official shall be personally served or sent by certified mail, return receipt requested. Any time periods provided in this Section shall be deemed to commence on the date of service as contemplated by O.C.G.A. § 9-11-4.

1221 C. The notice shall be mailed to the owner of the property on which the sign is located, the owner of the sign, and the occupant of the property. If any such person is unknown or cannot be found, notice shall be mailed to such person's last known address, if any, and posted on the sign or on the premises.

1221 D. Any person having a financial interest in the sign or the property may appeal the determination of the Building Official ordering removal or compliance by filing a written notice of appeal with the Board of Commissioners within twenty (20) calendar days after receipt of the notice. Appeals will be handled as provided in Section 1206.

1221 E. If the person to whom notice is directed pursuant to subsection (b) above fails to take corrective action within the time period prescribed, or if on appeal the Board of Commissioners affirms the decision of the Building Official and the person fails to take corrective action or remove the offending sign within the time period prescribed, then the Building Official shall proceed to have the sign removed or corrected to bring such sign into compliance with this ordinance or to remove any unsafe condition.

1221 F. When it is determined by the Building Official that the sign would cause imminent danger to the public safety and contact cannot be made with the sign owner or building owner, no written notice shall have to be served prior to removal. In such emergency situation, the Building Official shall document the unsafe condition and may correct the danger, with all costs being charged to the sign owner or the property owner.

1221 G. If it shall be necessary for the Building Official to remove the sign pursuant to the provisions of this Section, and it should be practicable to sell or salvage any material derived in the removal, the Building Official may sell or salvage any material derived in the removal. He may sell the same at public or private sale at the best price obtainable and keep an account of the proceeds thereof. Such proceeds, if any, shall be use to offset the cost of removal to be charged to the sign owner or property

owner. Any proceeds in excess of the cost of removal shall be returned to the sign owner, if known, or if unknown, shall be deposited in the City Treasury and maintained for benefit of the owner for a period of three years. At the end of three years, all unclaimed proceeds shall become the property the City. Where the proceeds derived from such sale are less than the costs of removal, such deficiency shall constitute a lien against the property on which the sign is located. Such lien shall be collectable in the same manner as City property taxes.

1221 H. Any sign removed by the Building Official pursuant to the provisions of this Section shall become the property of the City and may be disposed of in any manner deemed appropriate by the City. The cost of removal of the sign by the City shall constitute a lien against the property and shall be recoverable in the same manner as City property taxes. The cost of removable shall include any and all incidental expenses incurred by the City in connection with the sign removal.

1222. VARIANCES.

1222 A. Variances from the regulations of this ordinance shall be limited to the following hardship situations:

1. Where the proximity of existing signs on adjoining lots causes the subject property to be ineligible, due to spacing requirements, for a sign of the type sought; or
2. Where visibility of a conforming sign from the proposed street and within fifty (50) feet of the proposed sign would be substantially impaired by existing trees, plants, natural features, signs, buildings or structures on a different lot; and
   - **a.** Placement of the sign elsewhere on the lot would not remedy the visual obstruction;
   - **b.** Such visibility obstruction was not created by the owner of the subject property; and
   - **c.** The variance proposed would not create a safety hazard to vehicular traffic or pedestrians.

1222 B. Variances shall be limited to the minimum relief necessary to overcome the hardship. No variances shall be granted to allow a greater number of signs than would be allowed if the hardship did not exist.

1222 C. Relief from the application of the provisions of this ordinance by use of variances granted by the Board of Commissioners shall be granted only upon a finding of hardship as previously defined. Hearing on such variances shall be noticed using this same time frames and notice requirements as for variances from zoning decisions.

Article 13. THE SUBDIVISION AND SITE DEVELOPMENT PROCESS

1301. MANAGEMENT OF LAND DEVELOPMENT PROCESS: OVERVIEW

This chapter is designed to set forth the process that applicants need to follow in order to gain approval of subdivision plans and site development plans and pursue construction of land improvements on a parcel of land in the City of Griffin.

The department of development services, department of water/wastewater, department of public works and the department of stormwater share a similar organizational structure and mission. These departments are responsible for various aspects of the site and subdivision review, approval and land permitting process. In general, the department of development services is responsible for application intake; project tracking; plan review coordination; plan review for consistency with the zoning ordinance; plan review for consistency with the non-engineering aspects of these development regulations; plan approval; construction site inspection of land improvements; construction bond and escrow management; and land permit issuance. The department of public works/stormwater is responsible for plan review for consistency with the engineering/technical aspects of stormwater and streets; and field support for bond/escrow actions. The department of water/wastewater is responsible for plan review for consistency with the engineering/technical aspects of water and wastewater; and field support for bond/escrow actions.

Various other city and state agencies are also involved in the site and subdivision plan review process. They are the department of solid waste, department of electric, police department, fire department, Georgia Department of Transportation (GDOT), and the USDA Natural Resources Conservation Service. These agencies are requested, by the department of development services to review plans on an "as-needed" basis, depending on the scope and nature of the individual plan.

It is the stated mission of the City of Griffin, through the department of development services, department of water/wastewater, department of public works and the department of stormwater, to foster superior development through the provision of quality plan reviews and expeditious approvals. This is accomplished, in part, through a "one-stop" method of plan intake, review, approval, land permitting, and the project review team concept.

1302. GENERAL DEVELOPMENT REVIEW POLICY

It is the policy of the City of Griffin to consider the approval of site plans and subdivision plans and plans as part of a plan for the orderly, efficient and economical growth and development of the city.

1303. LOT STANDARDS AND RESTRICTIONS

1303 A. Easements.

No permanent structures or improvements shall be placed within any officially designated and recorded easement area.

1303 B. Substandard lots.

1. Lots of record.

Any lot of record existing at the time of passage of this ordinance shall not be reduced, divided or changed so as to produce a tract of land which does not comply with the minimum dimension or area requirements of this ordinance for the district in which it is located.

2. **Adjoining lots.**

   When two or more adjoining lots with continuous frontage are in one ownership upon adoption of this ordinance and such lots individually are less than the minimum square footage and/or have less than the minimum width required in the district in which they are located, then such lots shall be considered as a single lot. When such combination of lots would create a single lot having a width of 1.5 times or more than the width and area required by this ordinance, then such lot may be divided into two lots of equal width and be used as conforming lots.

3. **Lots not meeting minimum lot size requirements.**

   Any lot of record existing at the time of the adoption of this ordinance which has an area or a width which is less than required by this ordinance may be used as a building site for a structure or other use permitted in that zone; provided the yards, setbacks, open space and other requirements are met that would be required for a standard lot of required size in that zoning district. These requirements may be adjusted as provided in section 410.2.

1303 C. Every lot shall abut a street.

No building shall be erected, constructed, moved or relocated on a lot which does not have immediate frontage on at least one public street for a distance of not less than the minimum allowed frontage for said lot as described in the physical requirements standards section of the applicable zoning district.

1303 D. Use of two or more lots to satisfy zoning requirements.

1. Two or more contiguous lots under the same ownership may be used to satisfy zoning requirements (i.e. lot size, setbacks, yards, lot coverage, parking, etc.) only after either a consolidation or boundary adjustment plat has been approved and recorded eliminating the common, internal lot line(s), provided that this provision shall not operate to conflict with section 2 below.
2. For shopping malls, shopping centers, office parks, mixed-use condominiums and industrial parks developed as a single project, but that include lots under separate ownership subsequent to, or in conjunction with the development of the project, the physical requirements and design standards of the City of Griffin such as parking, setbacks, yards, lot coverage, open space, utilities and access that are not met by each lot shall be satisfied by all of the property included in the project, as a whole. In such event, permanent easement(s) or the specific development standard(s) not met by each lot shall be noted on the approved site plan and properly granted and recorded providing for the joint use and maintenance for such items as necessary so that the development standard(s) are met by the project as a whole.

   Following review by the city attorney, the city shall approve the document granting the required easements to determine that easements can be properly granted and cause the project and the individual lot(s) to comply with the development standards. The approved easement document shall be recorded in the records of the Clerk of Superior Court of Spalding County. In addition, the city attorney shall review any future amendments to the easement document to ensure compliance with the City of Griffin development standards.

1304. PROCESS DETAILS AND CHARACTERISTICS

1304 A. Project review committee.

The project review committee concept, as stated above, is an integral part of the "one-stop" method of site and subdivision plan review. The committee concept is designed to provide an applicant with clear, consistent, concise and timely plan reviews. In addition, the committee provides a continuity of reviewer via the utilization of a "case manager" to insure that issues are resolved at their proper level and time in the process, and are not revisited once resolved.

1. *Membership and composition.* The case manager shall be the director of the department of development services or their designee. He or she will remain continually involved with the

project throughout the entire development process, until all relevant land development permits have been issued. Other committee members shall consist of a representative from:

a. The department of public works;

b. The department of development services;

c. The department of stormwater;

d. The department of water/wastewater;

e. The department of solid waste; and

f. Consultant engineer.

Other departments and agencies traditionally involved in the review process will function on an "as-needed" basis.

2. *Committee meetings.* The committee meets at designated critical points throughout the site development plan review process. These meetings are kept to a minimum in order to save staff time.

3. *Responsibilities of the committee members.*

a. The case manager shall coordinate the overall review and processing of an application, and ensure that department comments do not conflict.

b. The department of public works is responsible for the engineering review of the street aspects of the plan. This includes a review for conformity with this ordinance's technical standards, other city and state technical regulations, and other generally accepted engineering and safe design standards.

c. The department of stormwater is responsible for the stormwater aspects of the plan. This includes a review for conformity with this ordinance's technical standards, stormwater design ordinance, and other city and state technical regulations, and other generally accepted engineering and safe design standards.

d. The department of water/wastewater is responsible for the engineering review of the water and sewer aspects of the plan. This includes a review for conformity with this ordinance's technical standards, other city and state technical regulations, and other generally accepted engineering and safe design standards.

e. The department of solid waste is responsible for the engineering review of the solid waste aspects of the plan. This includes a review for conformity with this ordinance's technical standards, other city and state technical regulations, and other generally accepted engineering and safe design standards.

1304 B. Required plan types.

1. *Preliminary site plans.* These initial plan types are required for all projects resulting in the creation of three or more lots or any new development involving 1.1 acres or more. Preliminary plans are meant to show the general design of a site development or subdivision project and its public improvements so the city can indicate its approval or disapproval of the project prior to the time the final plans and plats are designed. The city shall review the practicability of the preliminary plan and its general design. Attention shall be given to the arrangement, location, and width of streets and travelways, arrangement, placement, and size of structures, their general relationship to the topography of the land, feasibility of water supply and sewage disposal, general handling of site drainage, lot sizes and arrangement, the future development of adjoining lands as yet undeveloped, the relationship of adjoining developed lands, and the requirements/guidelines of the comprehensive plan, zoning ordinance, and this ordinance. Preliminary plans are not meant to either depict, or be reviewed for, final engineering design and details.

2. *Minor site plans.* This plan type may be submitted when the proposed improvements are being requested to a site of less than 1.1 acres on which the city either has not previously approved a final site plan, or on which there is an existing approved plan that has been closed (built). In addition, the proposed improvements must be minor in nature and generally, (1) not change either the internal or external traffic flow patterns; (2) not increase the number of dwelling units; (3) not increase the nonresidential building size by more than 2,500 square feet, or 75 percent of the gross building area, whichever is less; and (4) generally, the proposed disturbed area should not exceed 5,000 square feet. The applicant

must provide the department of stormwater an impervious site change form noting the limits of additional impervious area on the site.

3. *Final site and subdivision plans (construction drawings)*. These plan types, and any necessary supporting documents, for a proposed project, constitute the complete application for construction approval. They shall include complete and detailed engineering and layout drawings for all the public and private improvements and utilities, in addition to any necessary ancillary calculations, required for review. Upon approval, the final plans and plats form the basis for the construction of the project and the inspection services of the department of development services. The final site plan shall be recorded with the clerk of the superior court. An unrecorded plan is not a valid basis for site improvements or other commitments that depend on its design characteristics.

1304 C. Development plan review.

1. Once a complete application for a development plan has been submitted to the department of development services, and the appropriate fees paid, copies will be transmitted to a number of government agencies for their review and comment. Some of these reviews are necessary to meet city objectives. Other reviews are done to accommodate the applicant and expedite the process of development through coordination with state agencies.
2. Review of the aspects of the development plans, beyond the auspices of internal city agencies, are circulated by the department of development services to appropriate agencies such as the Georgia Department of Transportation (GDOT), Spalding County Planning Department (for plans on lots that abut the city/county boundary line) and the USDA Soil Conservation Service for review.
3. The basic review of a site development plan and subdivision plan is an analysis of the physical layout including the dimensions, the topography, the natural features of the site, proper erosion and sediment control provisions, and a determination of the use proposed in accordance with applicable laws and regulations.
4. Although the erosion and sedimentation control plan review is performed separately from the site development plan review, the city administers this review jointly with the site development plan review and site inspections.
5. All comments made by the review agencies must be satisfactorily addressed before the department of development services approves the plan. All approvals or denials shall be made in writing, stating the specific reasons therefore. The department of development services' approval in no way affects the authority of external agencies to issue their own permits for any aspect of the land development process which are within their respective jurisdiction.
6. Generally, the city shall make every effort to review development plans as expeditiously as possible. Once a completed application and required number of site plans are received by the department of development services, they are distributed to the applicable agencies. The first review period is ten working days. Comments are returned to the department of development services and if necessary, they are forwarded to the applicant's engineer, along with a set of "redlined" site plans for revisions. The second and third (if necessary) review periods, following receipt of required revisions, are five business days. These procedures are designed and intended to allow the city to review and approve minor site plans within 15 working days, preliminary residential plans within 30 days, and final subdivision and site plans within 45 days.
7. Following approval of the minor plan or final residential site and subdivision plan and/or the approval of an erosion and sedimentation control plan, the applicant may obtain land disturbance permits.
8. All applications for revisions to approved preliminary and final plans and plats shall be submitted to department of development services. Before being accepted, the application shall be reviewed for conformance with the appropriate minimum requirements and determination of the appropriate review time frames. The time frames and fee, if applicable, will be determined based on the complexity of the proposed revision.

1304 D. Plan validity periods.

1. *Preliminary site plan validity*.
   a. All preliminary site plan approvals are valid for 12 months from their date of approval.
   b. During that period, the following steps must be taken to maintain the validity (a) final plans are accepted for review, and are diligently pursued for approval, (b) final plans are approved, or (c) final plans are approved and permit issuance is being diligently pursued as demonstrated by bonding the plans and recording the plans. If a preliminary plan approval expires, no additional action shall be taken on the plan, or its subsequent final plans, without the submission of new preliminary plans and payment of all applicable fees.
2. *Final site plan validity*. All final site and subdivision plans and plans are valid for two years from their date of approval, subject to the following:
   a. Requirements to be completed immediately following receipt of final approval. The applicant shall complete the items listed below subsequent to the receipt of final approval:
      i. For site plans, record all related plans with the Spalding County Superior Court Clerk immediately following final approval (within ten days) without posting a performance bond and agreement.
      ii. For subdivisions, record all related off-site plans immediately following approval (within ten days) without posting a performance bond and agreement. All remaining related plans (on-site plans) shall not be recorded until a performance bond and agreement has been posted.
   b. Posting of a construction performance bond in accordance with section 300.8 of this ordinance, if applicable. This is a prerequisite to the release of plans and deeds for recordation; issuance of site development permits, building permits, occupancy permits, etc.
   c. Payment of any monetary and/or proffered contributions and/or obligations as established during the plan approval process, and referenced in the plan approval letter. This is a prerequisite to the release of the plans for recordation, or the issuance of site development permits, building permits, and/or occupancy permits.
   d. Recordation of all plans. The applicant will return following recordation of the plans and deeds, a copy of the recording receipt, a reproducible Mylar copy of the plans, and a copy of the deeds, to the department of development services. This is a prerequisite to the issuance of site development permits, site preparation permits, building permits, and/or occupancy permits.
   e. Completion of any other special items, agreements and/or post any other escrows enumerated in the plan approval letter. This is a prerequisite to the issuance of site development permits, building permits, and/or occupancy permits.
   f. Provide department of development services with evidence of possession of all required permits.
   g. Obtain a land disturbance permit. This is a prerequisite to the issuance of building permits.
   h. Following the completion of the above-enumerated items, the department of development services shall issue, upon request, a building permit.
   i. Schedule and hold a pre-construction conference with the departments of public works, stormwater and water/wastewater prior to initial commencement of land disturbance activities.
   j. Failure to complete all the items enumerated in this section during the final plan validity period shall cause the approval to expire and void the final plans. If the final approval is voided, further consideration of the final plan will require a new plan submission, and payment of applicable fees.

1304 E. General plan and plan submission requirements.

1. *Fees*. The application and review fees for all plans are established by resolution of the board of commissioners. As such, the director of development services can waive no fees. The applicable fees shall accompany all application submissions. Development applications are not deemed complete until all applicable fees have been paid.

2. *Number of plans to be submitted.* Minor, preliminary and final site plan review. The design professional shall initially submit one complete set of plans. Following completion of a preliminary review, the department of development services will notify the applicant with the number of additional plan sets to be submitted. This number will be based on the number of established and required review agencies. Following the notification, the additional plan sets should be submitted to the department of development services within five business days.

1304 F. Minor site plan submission requirements.

The following items shall be included with all minor site plans in order to have them accepted for review:

1. *Administrative items.*
   a. A City of Griffin Department of Development Services development application form completed in its entirety. If the property owner does not sign the form, a limited power of attorney form must accompany the application form.
2. *Plan details.*
   a. The sheet size shall not exceed 36" X 48". Plans consisting of more than two sheets shall be indexed and match lines, if required, shall follow property lines.
   b. A scale of no less than 1" = 200'; this shall be displayed on all plan sheets.
   c. Topographic contours with intervals no greater than five feet, referred to USGS datum.
   d. Date of plan, north arrow, match lines, and sheet numbers.
   e. A vicinity map, preferably at a scale of 1" = 2,000', but no smaller than 1" = 3,000'.
   f. The present zoning of the project parcel(s), and all adjacent parcels, within 50 feet of project site, along with their present use.
   g. The project site's current tax map, block and lot number(s).
   h. Total project site acreage.
   i. The proposed generalized pattern of lots and/or buildings (including the number and size), street and/or travelway layout, off-street parking layout, recreation areas, open space, and improvements to existing streets and rights-of-way, buffer, estimated traffic counts (vehicles per day) and storm water management facilities.
   j. Setbacks, open space calculations, buffer dimensions and other zoning requirements related to site design
   k. All existing restrictions on the use of the land including easements and covenants.
   l. Existing drainage facilities; including major culverts, ponds, and streams.
   m. Location of any existing buildings on the site, and within 50 feet of the property lines.
3. *Other minor site plans.* All applications for approval of minor subdivisions [i.e., one lot into two lots], consolidation and boundary line adjustment plans shall be submitted to the department of development services. Before being accepted, the application shall be reviewed for conformance with the appropriate minimum requirements, fee verification, and determination of the appropriate review time frames.
   a. If submission is found to be complete, it shall be stamped with the date and time of acceptance and the plan shall be reviewed and approved by the director of development services.
   b. Review time frames will be tailored to the nature of the specific application.

1304 G. Preliminary site and subdivision plans minimum submission requirements.

The following items shall be included with all preliminary residential plan site and subdivision plan application submissions in order to have them accepted for review:

1. *Administrative items.*
   a. A City of Griffin Department of Development Services development application form completed in its entirety. If the property owner does not sign the form, a limited power of attorney form must accompany the application form.
2. *Plan details.*

a. The sheet size shall not exceed 36" X 48". Plans consisting of more than two sheets shall be indexed and indicate match lines for lots of five acres or less in size. The match lines shall follow property lines.

b. A scale of no less than 1" = 100'; this shall be displayed on all plan sheets.

c. Topographic contours with intervals no greater than five feet, referred to USGS datum, extending 50 feet beyond the parcel's property lines, or additional distance as may be necessary in order to show major features or conditions that may affect the project.

d. Date of plan, north arrow, and sheet numbers.

e. A vicinity map preferably at a scale of 1" = 2,000', but no smaller than 1" = 3,000'.

f. The present zoning of the project parcel(s), and present zoning of all property within 50 feet of project site and use of all adjacent parcels.

g. The project site's tax map, block & lot number(s).

h. Total project site acreage.

i. Street rights-of-way; including name, number, and widths.

j. All existing easements; including type, width and use restrictions, if any. All zoning or prior plat conditions and/or variance approvals and conditions.

k. Existing storm drainage structures on the project parcel(s), and within 50 feet of the property lines, or additional distance as may be necessary in order to show major features or conditions that may affect the project; including type of pipe, sizes, and direction of flow.

l. Storm water management facilities on the project parcel(s), and within 50 feet of the property lines, or additional distance as may be necessary in order to show major features or conditions that may affect the project.

m. Stormwater management plan, stormwater design manual and schedule.

n. Streams, ponds, marshes, approximate boundaries of wetland areas, including names, if applicable, on the project parcel(s), and within 50 feet of the property lines, or additional distance as may be necessary in order to show major drainage features or conditions that may affect the project downstream of the site within the drainage basin.

o. The approximate 100-year flood area boundary and the source of the information.

p. Municipal or other publicly owned land within 50 feet of the property lines, or additional distance as may be necessary in order to show major features or conditions that may affect the project, including the distance to the nearest school or school site.

q. Existing utility lines and structures, such as water, sewer, gas, electric, telephone, wells, and drainfields (if any) on the project parcel(s), including size or capacity, and within 50 feet of the property lines, or additional distance as may be necessary in order to show major features or conditions that may affect the project.

r. Density tabulation provided by section and overall total number of proposed lots and/or dwelling units, and lot/unit numbers.

s. Streets, roads, travelways, improvements to existing streets and other rights-of-way, including widths, street classification, and preliminary anticipated traffic counts (vehicles per day).

t. Existing and proposed pedestrian systems and bike trails.

u. Proposed lot layout, if applicable.

v. Off-street parking layout, if applicable; including typical size, number of spaces by location, and a tabulation.

w. Proposed buildings, including use, height, and for site plans only, distance to property lines, building restriction (setback) lines and buffer dimensions (if applicable), and any existing buildings or structures on the property and within 50 feet of the property line, or additional distance as may be necessary in order to show major features or conditions that may affect the project.

x. Schematic storm drainage system and water and sewer systems.

y. Parcels to be dedicated to public use, including size and purpose.

z. The seal and signature of the design professional that prepared the plan shall be on each plan sheet.

1304 H. Final site and subdivision plans minimum submission requirements

The following items shall be included with all final site and subdivision plan application submissions in order to have them accepted for review:

1. *Administrative items.*

- **a.** A City of Griffin Department of Development Services development application form completed in its entirety. If the property owner does not sign the form, a limited power of attorney form must accompany the application form.
- **b.** Traffic impact analysis, if applicable.

2. *Plan details.*

- **a.** The sheet size shall not exceed 24" X 36". Plans consisting of more than two sheets shall be indexed and indicate match lines for lots of five acres (2.02 hectares) or less in size. The match lines shall follow property lines.
- **b.** A scale of no less than 1" = 50' for subdivisions, and 1" = 30' for all other site plans; the scale shall be displayed on all plan sheets.
- **c.** Topographic contours with intervals no greater than two feet, referred to USGS datum, extending 50 feet beyond the parcel's property lines, or additional distance as may be necessary in order to show major features or conditions that may affect the project.
- **d.** Date of plan, north arrow with designation, and sheet numbers annotated in consonance with any required subdivision plans, or meridian of record, if subdivision plans are not required.
- **e.** A vicinity map preferably at a scale of 1" = 2,000', but no smaller than 1" = 3,000'.
- **f.** The seal and signature of the design professional that prepared the plan shall be on each plan sheet.
- **g.** The present zoning of the project parcel(s), and all adjacent parcels, within 50 feet of project site, along with their present use.
- **h.** The project site's tax map, block and lot number(s).
- **i.** Total project site acreage.
- **j.** Street rights-of-way; including name, number, and widths.
- **k.** Revisions to an approved plan shall have a completed revision block on each sheet identifying the revisions. All revisions shall be circled in red on the initial submission. The project and plan number(s) for any previously approved plan shall also be referenced on the revision.
- **l.** Street rights-of-way; including names, route numbers, and widths.
- **m.** Boundary survey, including area tabulation, meeting minimum standards of Georgia law.
- **n.** All existing and proposed easements; including type, width, deed book and page reference, and use restrictions, if any. If any proposed improvements are located within the easements of these utilities, documentation shall be provided from the appropriate companies acknowledging permission to make the improvements, prior to final plan approval. For ingress/egress easements, a note shall be provided certifying that the applicant has been granted the right to use, and make improvements, within the easements.
- **o.** Streams, ponds, marshes, wetland areas on the project parcel(s), and within 100 feet of the property lines, including names, if applicable.
- **p.** The 100-year flood area boundary and the source of the information.
- **q.** Permanent open spaces (tabulated in acreage), including buffers, parks, and recreation areas, identifying proposed ownership and type of use.
- **r.** Municipal or other publicly-owned land within 50 feet of the property lines, or additional distance as may be necessary in order to show major features or conditions that may affect the project, including the distance to the nearest school or school site.
- **s.** Utility lines and structures, such as water, sewer, gas, electric, telephone, wells, and drainfields on the project parcel(s), including size and/or capacity, and within 50 feet of

the property lines, or additional distance as may be necessary in order to show major features or conditions that may affect the project.

t. Buildings and other structures on the project parcel(s) and within 50 feet of the property lines, or additional distance as may be necessary in order to show major features or conditions that may affect the project.

u. Traffic counts (vehicles per day).

v. Percent of grade noted at all driveway entrances.

w. A subdivision, easement, and/or dedication plan(s), if applicable.

x. Floodplain study, if applicable.

y. Lot layout; including lot numbers, area of each lot, and street dedication area. All resultant areas of recorded parcels, less than ten acres in size, shall be shown on the plans, and indicated in the area tabulation.

z. Density tabulation (provide by section and overall), total number of proposed lots and/or dwelling units.

aa. Streets, roads, travelways, and other rights-of-way, including deed book and page number, street classification, widths, rates of roadway super-elevation, when applicable, vertical curves with the sight distance noted, vertical and horizontal sight distances verified at all intersections, and improvements within the right-of-way. Guardrail and paved ditches shall be shown as required. Handicapped access curb ramps shall be provided at all street intersections.

bb. Off-street parking (including handicap) and loading layout, if applicable, including typical size, number of spaces by location, and tabulation by use type.

cc. Existing and proposed buildings and structures; including use, height, square footage, distance to property lines and between buildings, and any applicable building restriction lines (site plans only).

dd. Utility lines and structures, including sewer, water, gas, with sizes, types of pipe, plan and profile views, location of fire hydrants, control valves, pump stations, and anticipated flows and calculations (three copies of fire flow calculations submitted separately).

ee. Utility easements, including gas, electric, telephone and cable television, with the width and type indicated.

ff. Storm drainage system, including all required computations on the project parcel and within 50 feet of the property line, or additional distance as may be necessary in order to show major features or conditions that may affect the project, with sizes, type of pipe, gradients, invert elevations, direction of flow, drainage divides and areas for each structure.

gg. Storm water management facilities; including ten, 25, and 100 year water surface elevations and all required computations, access and maintenance easements.

hh. Final grading plan.

ii. Limits of clearing and grading; clearly labeled.

jj. Erosion and sediment control devices, their design and locations.

kk. Location of street name signs, traffic control signs, streetlights, stub-outs, and their easements, if applicable.

ll. Buffer areas, screening and landscaping including number, species and size.

mm. Tree save areas, if applicable.

nn. The seal and signature of the licensed professional engineer that prepared the plan shall be on each plan sheet.

1304 I. Subdivision and easement plat minimum submission requirements.

The following items shall be included with all required plans, including those for simple subdivisions, resubdivisions, consolidations, right-of-way dedications, easements, abandonments, vacations, and revisions to approved plans, in order to be accepted for review:

1. *Administrative items.*

a. A City of Griffin Department of Development Services development application form completed in its entirety. If the property owner does not sign the form, a limited power of attorney form must accompany the application form.

2. *Plan details.*

a. The sheet size shall not exceed 17" X 22," nor be smaller than 8½" X 11". All copies shall be reproduced on black or blue line paper. Plans consisting of two or more sheets shall be indexed and indicate match lines. For lots of five acres in size or less, any necessary match lines shall follow property lines.

b. A graphic scale of not less than 1" = 100', which shall be displayed on all plan sheets. Also, all plans shall use only one uniform scale.

c. Each sheet shall contain a title block which shall include: subdivision name, or owner's name, in accordance with the instruments of record; name and address of the engineering or surveying firm that prepared the plans; date of preparation, description of the plan's purpose, and the City of Griffin project and plan numbers and names (if applicable).

d. All plans shall contain a north arrow annotated with, and be referenced to:

i. True north for subdivisions or resubdivisions; or

ii. North of record may be used for minor resubdivisions, consolidations, off-site easements and off-site right-of-way dedications.

e. A vicinity map, preferably at a scale of 1' = 2,000'.

f. Seal and signature of the land surveyor or professional engineer that prepared the plan shall be on each plan sheet.

g. A surveyor's certificate containing the following elements:

i. The name of the current owner and the recordation reference of the most recent instrument in the chain of title;

ii. For subdivisions and consolidations, the recordation reference of any previous plan of subdivision or resubdivision, whichever is the case.

iii. A statement that the boundary of this subdivision, or resubdivision, is based on a current field survey (in this case it is expected and understood that the seal and signature of the land surveyor evidences that the boundary shown complies with the minimum field practices for such surveys, as set forth in the Rules and Regulations of the State Board of Architects, Professional Engineers, Land Surveyors, and Landscape Architects), or that the boundary shown is the result of compilation from deeds and/or plans of record.

h. Area tabulation indicating (where applicable) the total site area, number of new lots and/or parcels, number of recorded lots and/or parcels, new right-of-way dedications, and vacated rights-of-way.

i. Subdivision, parcel, and lot boundaries with bearings and distances and/or complete curve data. Internal lots shall be geometrically related to the boundary of the subdivision, or section thereof. Curve data shall be shown on the same sheet as the curve it describes.

j. All existing structures shown on the plan.

k. Street addresses (assigned during the review process as necessary).

l. Proposed and existing easements annotated with the following: type, purpose and width; bearings and distances and/or curve data for centerlines, or limits, with ties to property lines and corners (new easements only); deed book and page references for existing easements.

m. Proposed and existing streets within and/or adjacent to the subdivision, and provided with the following: name, route number, centerlines, bearings and distances and curve data for the rights-of-way.

n. Vacated streets and parcels with the area vacated and those areas reverting to appropriate abutting parcel(s).

1305. REGULATIONS AND PROCEDURES GOVERNING THE CONVEYANCE OF REAL PROPERTY AND EASEMENTS TO THE CITY OF GRIFFIN

Whenever an applicant proposes, or is legally required, to convey interests in real property to the city, conveyance of such interests shall be made by appropriate deed to the City of Griffin. The city may then further convey the interest, as it shall deem proper. The city attorney or his designee, which approval shall be evidenced by appropriate notation and signature on the face of the instrument, shall approve all deeds prior to recording.

1305 A. In order to insure that the property rights dedicated to the city may be used for the purpose intended, all conveyances of fee simple title shall be free of conditions, restrictions, and encumbrances affecting marketability of title.

1305 B. Conveyance of real property may be made subject to easements, rights-of-way, and other restrictions which properly appear in the lawful chain of title to the property but only if a title opinion has been provided to, and approved by, the city attorney. Such report shall be prepared at the applicant's expense by an attorney approved by the city attorney. Such title report shall identify the nature and extent of such easements, rights-of-way, and other conveyances of title subject to any conditions, restrictions, and encumbrances that the city attorney determines does not adversely affect the use for which the interest in land is to be dedicated.

1305 C. All deeds and title opinions required hereby shall be submitted to the department of development services for review no later than when the final plans are submitted for approval. They shall be forwarded to the city attorney who shall note his approval or disapproval, specifically noting his reasons for disapproval, if any.

1305 D. Upon approval of deeds and title opinions by the city attorney, the deed shall be presented to the board of commissioners at a duty-convened meeting for acceptance of dedication. The signature of the chairman on the face of the deed shall be prima facie evidence of formal acceptance by the City of Griffin of all interests conveyed.

1305 E. The applicant shall be responsible for assuring all deeds and plans are properly recorded in the land records of Spalding County and shall submit a copy of the recorded document, with the appropriate deed book and page numbers, for the project records.

1306. SUBDIVISION NAMES AND SITE PLAN NAMES

1306 A. Names of subdivisions and site plans shall not duplicate or closely approximate names already in use or approved by the department of development services. All site plan and subdivision names are subject to approval by the department of development services.

1306 B. Lot or unit numbers within a subdivision section shall be consecutive whole numbers starting with the number one. There shall be no prefix or suffix attached to the number, except in the case of resubdivision of lots.

1306 C. Site plans submitted for property that is a recorded or proposed subdivision under review shall use the same name as the subdivision for identification.

1306 D. Site plan and subdivision names shall not be changed subsequent to approval of the name during review.

1307. VIOLATIONS AND STOP WORK NOTICES AND PROCEDURES

1307 A. Construction activity on any site shall be conducted in strict accordance with the limits of clearing and grading as shown on final plans approved by the director of development services. Construction activity shall also be conducted only on those items for which a permit has been obtained. Failure to obtain required permits, or develop the site in accordance with approved plans, will necessitate the city taking any and all necessary actions required to correct the situation. Such actions may include, but shall not be limited to the following:

1. *Posting of a stop work (construction) notice*. Such notice shall be posted in a conspicuous place on the site in violation by a representative of the agency responsible for the inspection of the improvements being made, and also forwarded, by certified mail, to the developer.
2. *Issuing a written notice to the owner or responsible agent, from the agency responsible for the inspection of the improvements, outlining the nature of the violation and requiring on-site activity to cease and desist immediately*. A copy of the notice shall be sent to all other agencies responsible for inspections on that site.
   - **a.** This notice will instruct all other agencies to revoke all permits which may have been issued, cease making any further inspections on that site and cease processing any plans for that site, if the directors of development services, public works, stormwater or water/wastewater deems the violation to be of such a serious nature.
   - **b.** If cooperation is not received from the owner or responsible agent and work is not stopped immediately upon notice, a court injunction to stop work (construction) will be sought.
3. The directors of development services, public works, stormwater or water/wastewater may, if necessary or appropriate, seek criminal process against any person who violates any provisions of this ordinance. The issuance of a violation notice and correction order shall not be deemed a precondition to the issuance of a warrant or summons for such violation. In addition, the director of public works may seek immediate civil relief, regardless of what other action has been or will be taken.

1308. SITE PROTECTION

1308 A. The following kinds of construction sites shall be deemed readily accessible to the public and shall require special safety measures:

1. Sites within 500 feet of residential properties.
2. Sites within 500 feet of public use areas such as schools, parks, churches, commercial areas.
3. Any other sites which in the determination of the director of development services are readily accessible to the public due to prolonged time of construction, close proximity to public or private streets, or any other characteristics or conditions making the site particularly attractive to children.

1308 B. The following safety measures shall apply to insure protection to the general public whenever construction areas are readily accessible:

1. Danger signs on construction, excavation, demolition projects shall be posted in a conspicuous manner.
2. Excavations shall be conducted in accordance with the requirements of the Southern Building Code Congress International (SBCCI) and the U.S. Occupational Safety and Health Administration (OSHA).

1309. PERFORMANCE BONDING POLICY

1309 A. Purpose.

It is the purpose of this section to assure that infrastructure associated with development projects that is to be publicly dedicated is actually constructed to

minimum design standards, acceptable to the city, and, once officially accepted, protected by an enforceable maintenance agreement for a period of two years.

1309 B. Performance agreements and guarantees.

1. A performance agreement, supported by an acceptable form of guarantee, shall be required on all projects that require public infrastructure including, but not limited to, streets, sidewalks, water, sewer, drainage facilities and improvements, parks and open space, and any other improvements that become the property of the City of Griffin for future maintenance purposes. This agreement and guarantee shall obligate the applicant to construct all required improvements, in accordance with approved plans, in a timely manner. Public agencies seeking site development plan approval may supply a letter of intent to comply with this requirement, provided that a performance agreement is secured from the contractor performing the construction, guaranteeing the construction will be completed in accordance with the approved site development plans and requirements.
2. A separate soil erosion and sedimentation control bond may be required on projects subject to the city's soil erosion and sedimentation control ordinance as a condition for issuance of any land disturbing activity permits to assure the timely installation and maintenance of required erosion control measures during the construction period. Requirements for such bond may be found in the city's soil erosion and sedimentation control ordinance.
3. The department of public works may also require, if applicable, an acceptable form of guarantee, to assure the timely construction and completion of required site improvements such as amenities, in accordance with approved plans including, but not limited to, recreational facilities, storm water facilities, parking, driveways, landscaping, and other improvements not intended for public dedication but which serve a common benefit to users and occupants of the development.
4. The term of the agreement shall correspond to the estimated length of the project construction period, as agreed upon between the applicant and the director of development services. Thereafter extensions may be permitted if requested in advance of the current expiration date. All agreements and any extension thereof shall be in writing.
5. The aggregate amount of all forms of guarantee posted on a project shall not exceed the total of the estimated cost of construction, as agreed upon between the applicant and the director of development services. In the event of a dispute, the amount reasonably determined by the director of development services shall be conclusive.

1309 C. Extensions and rebonding of agreements.

1. When a developer enters into an agreement with the City of Griffin, it is understood that all the necessary physical improvements must be completed in the specified period of time. If all the noted improvements are not completed within this time period, and no extension has been obtained, or a replacement agreement and bond have not been submitted and approved with a new expiration date, the agreement shall be deemed in default.
2. Approximately 60 days prior to the expiration of the agreement, the city shall notify the developer in writing of the expiration date. The notification shall advise the developer that he will be in default unless the work is completed in accordance with the agreement and approved plans, or an extension of time is obtained in accordance with the requirements of this policy.
3. The developer shall make a written request to the director of development services for an extension of the performance agreement's expiration date.
   - **a.** The first request may be for a period not to exceed one year. In order to receive the maximum extension, the developer must demonstrate that the extension would be in the best interest of the city.
   - **b.** If subsequent extensions are required, they will be for maximum periods of six months each. All requests shall be made at least 14 calendar days prior to the expiration date.
   - **c.** The developer must indicate the reasons and conditions that have precluded him from completing the required physical improvements. The developer must also present written consent to the request from all sureties involved, including corporate surety companies. In addition, the request shall contain a detailed cost estimate of the work remaining, together with a projected timetable for completion.

d. An additional fee to cover any necessary inspection and administrative costs shall be paid in accordance with the fee schedule for such inspections.

4. The director of development services, upon receipt of the extension request, will review the project particulars and may either deny or condition the extension granted. The factors to be considered by the director shall include the following:

a. Percentage of the project that has been completed. This shall be viewed as the percentage of the bonded improvements completed. Generally, this should be at least 50 percent for the first extension request and 85 percent for the second request.

b. Number of homes/units completed, occupied, and served by public facilities, if applicable. Generally, this should be at least ten percent of the project for each year (or prorated portion thereof) the project has been under construction.

c. Developer's performance history on prior projects in the City of Griffin. This shall be based on the developer's previous number of defaults.

d. The collective number, type, and validity of complaints lodged against the developer.

e. Whether the project provides access and/or infrastructure necessary for other projects that are either under construction or approved and no site development permits have been issued.

5. In the event the developer does not respond to the letter sent by the city cautioning him of impending default, and the project is not completed by the expiration date, the matter shall be reviewed by the director of development services for appropriate action including referral to the city attorney for action.

1309 D. Performance bond reductions.

1. Any form of guarantee may be partially released periodically (i.e., reduced) to an amount not less than either 25 percent of the project's highest bond value or not less than the actual cost of completion, whichever is higher, plus permitted allowances in accordance with the provisions of this section.

2. All reduction requests shall be submitted in writing to the director of development services. No request shall be deemed officially received unless submitted in accordance with the following requirements:

a. If an extension of the performance agreement is sought, every requirement for an extension request must be met, including, but not limited to, submission of written consent by the surety to any such request;

b. The request shall identify the project, performance agreement, bond, and completion date and must specify the amount of reduction sought. It shall also contain a detailed cost estimate, certified by the project design professional, of the remaining work and a projected timetable for completion.

c. A fee, covering any necessary inspection and administrative costs, shall be paid in accordance with the fee schedule.

3. Periodic partial bond reductions shall not occur before at least 30 percent of the bonded improvements have been satisfactory completed.

4. The city shall not be required to execute more than three reductions in any 12-month period, except as authorized by the director of development services.

5. No reduction shall be approved if the performance agreement is in default. However, reduction requests may be considered concurrently with extension requests.

a. In such instances as the director of development services deems appropriate, the developer shall furnish a certificate of completion, from a state licensed professional engineer, stating the work described has been performed in strict conformity with either the approved final plans, or as-built plans submitted therewith, and that the work meets all applicable standards.

b. The director of development services or his designee shall act upon any reduction request within 30 days of its official receipt. If the request is disapproved, the developer shall be notified in writing of the specific reasons for disapproval. If no action is taken within the time specified, the request shall be deemed approved and a partial release granted.

1309 E. Performance bond and agreement final release procedure.

1. All final performance bond release requests shall be authorized within 30 days of their official receipt, in writing, by the director of development services, provided the following criteria have been met:
   - **a.** Acceptance of all public facilities by the state agency, local government department or agency, or other public authority that is responsible for maintaining or operating such facility, and the completion and approval of any other bonded site related improvements.
   - **b.** Acceptance of as-built plans by the departments of development services, public works, stormwater and water/wastewater.
   - **c.** Payment by the developer of all required fees, proffers and contributions.
   - **d.** Posting of a two-year maintenance bond in an amount equal to 25 percent of the initial bond amount posted for water, sewer and streets.
2. If a final bond release is not authorized within the 30-day period, the developer may send an additional request, by certified mail, to the director of development services. Within ten business days of the receipt of the request, the director of development services shall either release the bond, or notify the developer of the specific agency approval not received. If no action is taken, the request shall be deemed approved and final release granted.

1309 F. Default and evaluation procedures.

1. If the developer fails to complete the required site improvements in the period of time specified in the agreement, or any approved extension, the developer is deemed in default.
2. The department of development services shall forward a report on the project to the city manager, with the director of development service's recommendation to formally declare the project to be in default. Such recommendation shall also enumerate a recommended course of action in response to default. Such recommendation may include the following, in any combination:
   - **a.** That the city attorney be authorized to institute such actions as deemed appropriate to enforce the provisions of this policy, the performance agreement and bond, and applicable code provisions.
   - **b.** That demand be made of the surety on the developer's bond for payment of the funds secured thereby, for application to completion of the project, or for performance of its principal's obligations.
   - **c.** That the city contract for completion of unfinished infrastructure.
   - **d.** That all or any portion of the project be vacated.
   - **e.** That any successor in interest to the defaulted developer be required to post an adequate replacement performance agreement.
   - **f.** That no additional building permits be issued for the project subject to the bond until an adequate right of entry permit bond is posted with the city. Such a bond shall bind and hold the applicant responsible for any and all damages to any public improvements already in place caused by work covered by the resulting right of entry permit and building permit.
3. The developer and surety will be mailed copies of the department of development service's report and recommendation. They also will be advised of their opportunity to be heard on the matter at the scheduled meeting of the board of commissioners. Either the developer or the surety, or both, may offer proposals for completion as alternatives to that of the recommendation of the director of development services. Any such proposal must be submitted in written form and signed by someone with the appropriate authority to issue a binding proposal.
4. All defaulted projects shall be scheduled for completion in chronological order of their declaration of default. Exceptions to a policy of first in, first out shall be made when the funds associated with a bond or letter of credit are collected by the city and cover the cost to complete the bondable items, and the project is eligible for acceptance. In such cases, the project shall be inserted into the existing project completion schedule as the next project to be handled by the city and/or its contractor.

1310. AS-BUILT PLANS

1310 A. As-built plans shall be required on all completed development projects accept those only requiring minor site plans. The acceptance of as-built plans shall be a prerequisite to final construction acceptance, bond release, and the issuance of a final certificate of use and occupancy. Copies of the as-built plans prepared and certified by a registered land surveyor or professional engineer shall be submitted to the departments of development services, public works and water/wastewater at the time final inspections are conducted. Final inspections will not be made unless the as-built plans are available.

The following information shall be included on the plans:

1. Horizontal locations of all sanitary sewers, storm sewers and waterlines, which include:
   - **a.** Two ties to all water valves or blow offs. In cases where a group of valves may be located at an intersection, two ties may be provided to one valve and the remaining valves tied to each other;
   - **b.** One tie to all sanitary sewer manholes and storm sewer structure;
   - **c.** Two ties to all sanitary sewer cleanouts on laterals which are located within a street right-of-way, and two ties to the first clean out on a lateral connected to a main within a street right-of-way;
   - **d.** Location of all water meters, detector checks, fire-flow meters, fire hydrants, air release valves, grease traps and any other water or sewer system appurtenances. The size of all meters larger than three-fourths inch is to be noted. All ties shall be affixed to easily locate permanent objects (i.e., building corners).
2. Invert elevations on storm sewers and sanitary sewers.
3. Length, size, and type of material used for all storm sewer and storm water management systems.
4. Top of structure elevations on all sanitary manholes and storm sewer structures.
5. As-built topography on storm water detention basins and verification of storage volumes.
6. Detailed as-built information for special design drainage and storm water management structures.
7. Spot elevations showing inverts of improved channels and swales located in dedicated drainage easements.
8. All dedicated easements. The cover sheet shall show, the deed book and page number(s), in which the water and sewer easements and/or subdivision plans are recorded, must be shown.
9. A graphic scale.
10. Any changes from the approved construction plans must be indicated by circling the change in red.
11. A note certifying compliance of the site to approved plans and conformance of any revisions, to all applicable standards. The following certification shall be used:
    - **a.** "This physical survey has been reviewed, and in my professional opinion, based upon my knowledge, information, and belief, the design elements measured by the physical survey comply with the approved plans. This review does not imply in any way that (i) inspections were made during the construction, (ii) to the quality of the work, or (iii) to any element or structure not visible or depicted on the physical survey."

In addition to the as-built plans, the professional engineer shall provide the city with a measure of the impervious area of the site. This information shall be shown in a form, and provided in digital format, as detailed by the department of stormwater. The as-built plans and the impervious area information will be reviewed for compliance with the requirements of this section during the final inspections. Any deficiencies with the as-built plans or the impervious area information must be corrected before final construction acceptance is granted.

1311. CERTIFICATE OF USE AND OCCUPANCY

1311 A. No new building or an addition to a previously constructed building shall be occupied, nor shall a change of use of a property or any structure be permitted until a certificate of use and occupancy has been issued by the director of development services in accordance with applicable building codes, this ordinance and the provisions of the zoning ordinance.

1311 B. In addition, no certificate of use and occupancy shall be issued for residential uses (other than single-family detached dwellings, commercial, institutional or industrial uses) until all required site improvements are installed in accordance with the approved plans, or in accordance with a written phasing plan approved by the department of development services.

1311 C. A certificate of use and occupancy shall state that the use and/or structures complies with all relevant provisions of this ordinance and the zoning ordinance, and that it has been inspected by appropriate public officials and meets all requirements of applicable building codes, fire codes, and other laws, ordinances, rules and regulations governing the construction and use of structures on property.

1311 D. The director of development services has the authority to issue a temporary certificate of use and occupancy for a period not to exceed six months where factors beyond the applicant's control have kept him from completing the required site improvements. Prior to the issuance of a temporary certificate of use and occupancy, all site improvements (bondable and otherwise) required by this ordinance and the zoning ordinance not yet installed shall be bonded in accordance with Section 1309 of this ordinance. For developments, all non-bonded deficiencies shall be guaranteed by the submission of an irrevocable letter of credit or establishment of a cash escrow account.

1311 E. The director of development services may issue a final certificate of use and occupancy for a portion of a multiphase, multiple section or multi-tenant project.

1. Such certificate of use and occupancy shall only be issued, predicated on the following:
   - **a.** The director's review and approval of a written, phased site development plan;
   - **b.** Approval of all safety related items (e.g. frontage improvements, ingress and egress, storm water management facilities, street lights, handicap parking signs, etc.); and
   - **c.** Approval of adequate additional amenities as may be required to serve that portion of the project.

CITY OF GRIFFIN DEPARTMENT OF DEVELOPMENT SERVICES
Preliminary Site & Subdivision Plan Minimum Submission Requirement Checklist

Preliminary Site Plans are required for all projects resulting in the creation of three (3) or more lots or any new development involving 1.1 acres or more. Preliminary plans are meant to show the general design of a site development or subdivision project and its public improvements so the City can review the proposal and comment on its approval, disapproval or applicable changes to the project prior to the submission of final plans and plats.

PROJECT NAME: _____

ADMINISTRATIVE ITEMS

- ❑ Fee in accordance with the City of Griffin Fee Schedule
- ❑ City of Griffin "Development Application Form"
- ❑ Limited Power of Attorney form (only if Application Form is not signed by the owner)
- ❑ 10 complete sets of plans as detailed below

PLAN DETAIL ITEMS

- ❑ Sheet size not to exceed 36" x 48". More than two sheets indexed with match lines.
- ❑ Plan scale of no less than 1" = 100'.
- ❑ Contours with intervals no greater than 5', referenced to USGS datum, extending 50' beyond parcel's property lines.
- ❑ Date of plan, north arrow, match lines, sheet numbers.
- ❑ Vicinity map, preferably at 1" = 2,000' scale.
- ❑ Present zoning and use of the project's lot(s) and all adjacent lots within 50' of project site.
- ❑ Project's tax map, block, lot number(s) and all adjacent lots within 50' of project site.

300-1

- ❑ Total project site acreage.
- ❑ Street rights-of-way, including names and widths.
- ❑ All existing drainage structures, including type of pipe, size and flow direction, on the property and within 50' of the property lines.
- ❑ Stormwater management plans and BMP facilities on the project site and within 50' of the property lines.
- ❑ Streams, ponds, marches, approximate boundaries of wetland areas on the project site and within 50' of the property lines.
- ❑ Approximate 100-year flood area boundary.
- ❑ Existing utility lines and structures, such as water, sewer, gas, electric, telephones, wells, drainfields, including size and capacity, on the property and within 50' of the property.
- ❑ Density tabulation, provided by section and overall total number of proposed lots/dwelling units, and lot/unit numbers.
- ❑ Proposed streets, travelways, improvements to existing streets and other rights-of-ways, including widths, estimated traffic counts.
- ❑ Pedestrian systems and bike trails.
- ❑ Lot layout.
- ❑ Off-street parking layout, including typical size, number of spaces by location and overall tabulation.
- ❑ Buildings, including use, height, distances to property lines, any existing buildings on the property and within 50' feet of the property lines.
- ❑ Schematic storm drainage system and water and sewer systems.
- ❑ Parcels to be dedicated to public use, including size and purpose.
- ❑ Seal and signature of the engineer/architect/surveyor that prepared the plan; on each plan set sheet.

I HEREBY CERTIFY THAT THE STATED INFORMATION IS INCLUDED ON THE ATTACHED PLAN.

_____ _____

Date Engineer/Surveyor/Architect Signature

300-2

CITY OF GRIFFIN DEPARTMENT OF DEVELOPMENT SERVICES
Final Site and Subdivision Plan Minimum Submission Requirement Checklist
(Construction drawings)

Final site plans are required for all site developments and subdivision projects and their public improvements. These plans should include complete and detailed engineering and layout drawings for all public and private improvements and utilities, in addition to any necessary ancillary calculations. The final site plan shall be recorded with the Clerk of the Superior Court prior to issuance of any applicable permits.

PROJECT NAME: _____

ADMINISTRATIVE ITEMS

- ❑ Fee in accordance with the City of Griffin Fee Schedule
- ❑ City of Griffin "Development Application Form"
- ❑ Limited Power of Attorney form (only if Application Form is not signed by the owner)
- ❑ 10 complete sets of plans as detailed below

PLAN DETAIL ITEMS

- ❑ Sheet size not to exceed 24" x 36". More than two sheets indexed with match lines.
- ❑ Plan scale of no less than 1" = 50' for subdivision & 1' = 30' for site plans.
- ❑ Contours with intervals no greater than 2' referenced to USGS datum, extending 50' beyond parcel's property lines.
- ❑ Date of plan, north arrow, match lines, sheet numbers.
- ❑ Vicinity map, preferably at 1" = 2000' scale.
- ❑ Seal & signature of engineer that prepared plan; on each plan set sheet.

300-3

- Present zoning and use of the project's lot(s) and all adjacent lots within 50' of the project site.
- Project's tax map, block and lot number(s) and all adjacent lots within 50' of the project site.
- Total project site acreage.
- Street rights-of-way, including names and widths.
- Plans showing revisions to approved plans shall have a completed revision block on each sheet.
- After 1st cycle review, all subsequent plan revisions shall be circled in "red" on all plans.
- Boundary survey with 1/10,000 closure ratio, including area tabulations.
- All existing & proposed easements, including type and width, covenants and other restrictions on use shown.
- Streams, ponds, marshes, wetland areas on the project site and within 100' of the property lines.
- 100-year flood area boundary.
- Permanent open spaces, tabulation in acres, buffers, parks and recreation areas including ownership and size of facility.
- Existing utility lines and structures, such as water, sewer, gas, electric, telephones, wells, drainfields, including size and capacity on the property and within 50' of the property.
- Existing buildings and other structures on the project property and within 50' of the property lines.
- Traffic counts.
- Percent of grade noted at all driveway entrances.
- Subdivision, easement and/or dedication plat(s).
- Floodplain study.
- Proposed lot layout (for subdivision), including lot numbers, area of each lot and street dedication areas area tabulations.
- Density tabulation, provided by section and overall total number of proposed lots/dwelling units and lot/unit numbers.

300-4

- ❑ Existing & proposed streets, roads, travelways, and other rights-of-way, including street classification, widths, vertical curve with sight distances at all intersections, existing and/or estimated traffic counts and all improvements in the ROW. Handicapped curb ramps at all street intersections.
- ❑ Off-street parking and loading layout, including typical size, number of spaces by location and tabulation by use.
- ❑ Proposed buildings and structures, including use, height, square footage, distance to property lines and between buildings.
- ❑ Proposed utility lines and structures, including sewer, water and gas showing size, types of pipe, plan and profile views, location of fire hydrants, control valves; pump stations and anticipated flows and calculations (3 copies of fire flow calculations submitted separately).
- ❑ Storm drainage system, including all required computations on the project parcel and within 50' type of pipe size and flow direction on the property and within 50' of the property lines.
- ❑ Stormwater management plans and BMP facilities on the project site and within 50' of the property lines, including 10, 25 & 100 year water surface elevations and all required computations, access and maintenance easements.
- ❑ Final grading plan.
- ❑ Limits of clearing and grading, clearly labeled.
- ❑ Erosion and sedimentation control devices, their design and locations and a copy of the State NPDES NOI permit. (Dated letter of submittal is acceptable)
- ❑ Buffer areas as required, screening and landscaping including number, species and size.
- ❑ Tree save areas and/or individual trees to be saved, including type and size (DBH).

I HEREBY CERTIFY THAT THE STATED INFORMATION IS INCLUDED ON THE ATTACHED PLAN.

_____ _____

Date Engineer/Surveyor/Architect Signature

300-5

CITY OF GRIFFIN DEPARTMENT OF DEVELOPMENT SERVICES
Minor Site Plan Minimum Submission Requirement Checklist

Minor site plans are required when the proposed improvements are being requested to a site of less than 1.1 acres on which the city has previously approved a final site plan and the proposed disturbed area should not exceed 5,000 square feet.

PROJECT NAME: _____

ADMINISTRATIVE ITEMS

- ❑ Fee in accordance with the City of Griffin Fee Schedule
- ❑ City of Griffin "Development Application Form"
- ❑ Limited Power of Attorney form (only if Application Form is not signed by the owner)
- ❑ 10 complete sets of plans as detailed below

PLAN DETAIL ITEMS

- ❑ Sheet size not to exceed 24" x 36". More than two sheets indexed with match lines.
- ❑ Plan scale of no less than 1" = 30'.
- ❑ Date of plan, north arrow, match lines, sheet numbers.
- ❑ Vicinity map, preferably at 1" = 2,000 scale.
- ❑ Seal and signature of the engineer/architect/surveyor that prepared the plan/ on each plan set sheet.
- ❑ Present zoning and use of the project's lot(s) and all adjacent lots within 50' of the project site.
- ❑ Project's tax map, block and lot number and all adjacent lots within 50' of the project site.

300-6

- ❑ Existing and proposed entrance locations, including the distance to nearest street intersection(s) and site distance.
- ❑ Existing and proposed travelways and parking spaces with dimensions.
- ❑ Existing and proposed buildings, with sizes and dimensions.
- ❑ Existing and proposed sanitary sewer and water facilities.
- ❑ Proposed erosion and sedimentation control measures and facilities.

I HEREBY CERTIFY THAT THE STATED INFORMATION IS INCLUDED ON THE ATTACHED PLAN.

_____ _____

Date Engineer/Surveyor/Architect Signature

300-7

Article 14. ROADS, SITE AND DRAINAGE DESIGN SPECIFICATIONS

1401. SUBMITTAL REQUIREMENTS.

1401 A. Traffic analysis.

New developments that will generate a significant amount of traffic may be required to perform a traffic analysis. The city will review each proposed development on a case-by-case basis to determine if a traffic study is required. If the city deems the size of the project warrants a traffic study, then the developer's design professional who is qualified to do this type of work will be required to perform a traffic study. The study must include traffic impacts on the existing road(s) adjacent to the project, improvements to the existing road(s), entrance requirements, number of entrances, traffic circulation within the project, width of proposed streets, etc.

1401 B. Hydrology study.

Each new development will be required to perform a hydrology study by a qualified professional engineer registered in the State of Georgia. The study shall include a discussion of existing downstream conditions and impacts of the proposed development to downstream properties, measures taken to address increased runoff, concentrated discharges, etc.

1401 C. Plans.

All plans shall have sheet sizes no larger than 24" X 36".

1. *Subdivisions.*

a. The preliminary plan shall show land lots, district and north arrow, existing and proposed roads with their names, lot layout. Existing roads shall show existing and proposed right-of-way, pavement widths and signs distances. The preliminary plan shall also show topography with contour lines at two-foot intervals, all existing streams, watercourses and storm sewers, and the discharge points for all existing drainage structures. Floodplain limits, if applicable, shall be shown on the plat.

b. The final site and subdivision (construction plans) shall include the preliminary plan and in addition the proposed road system layout in plan and profile. The road layout shall include stations every 100 feet in plan and profile, horizontal and vertical curve data, intersection radii, width and section of proposed roads, entrance design, cul-de-sac dimensions, drainage structures and storm sewer locations, curb and gutter details, utility locations, street signs, etc. The storm sewer system shall be shown in plan (with easements) and profile. The storm sewers shall have proposed inverts at each drainage structure, lengths and slopes of pipes, pipe sizes, types of storm sewers and drainage structures, etc. Detention facilities with proposed grading shall be shown on the plans with the principal and emergency spillways shown in plan, profile and sections. The storm sewer system shall show drainage areas, runoff coefficients, intensity rates, peak flows, pipe capacities, headwater depths, etc. Details of road sections, curb and gutter, drainage structures, etc. shall be shown on the plans.

c. The minor site plan shall comply in all aspects with the Georgia State Plat Act. The plan shall note land lots, tax map, block and lot number, building setbacks, current zoning of property, closure error (field and calculated), survey equipment used and private covenants. In addition, the plan shall show lot numbers in consecutive order, street names, 100-year floodplain or note absence, drainage easements, water (if applicable) and sanitary sewer system easements, north arrow, index map and storm sewer pipes and sizes. All lettering shall be legible in accordance with the State Plat Act. Sheet sizes shall not exceed 24" X 36" and the lettering shall be large enough that when the plan is reduced for recording, lettering will still be legible.

2. All individual commercial/industrial site plans shall comply in all aspects with the Georgia State Plat Act. The plan shall note land lots, tax map, block and lot number, required building setbacks, proposed building(s), right-of-way, pavement widths and sign distances on existing

road(s), entrances, driveways, maneuvering aisles, parking spaces, size with number of justified of parking spaces and proposed grading. road frontage width, current zoning of property, north arrow, topography with existing contour lines at two-foot intervals, existing streams, water courses and storm sewers, closure error (field and calculated), survey equipment used and private covenants. In addition, the plan shall show lot numbers in consecutive order, street names, 100-year floodplain or note absence, drainage easements, water (if applicable) and sanitary sewer system easements, index map, and proposed storm sewer pipes and sizes and profile with inverts, lengths, grades, types of pipes and drainage structures. Detention facilities with proposed grading shall be shown on the plans with the principal and emergency spillways shown in plan, profile and sections. The storm sewer system shall show drainage areas, runoff coefficients, intensity rates, peak flows, pipe capacities, headwater depths, etc. Details of pavement sections, curb and gutter, drainage structures, etc. shall be shown on the plans. All lettering shall be legible in accordance with the State Plat Act. Sheet sizes shall not exceed 24" X 36" and the lettering shall be large enough that when the plan is reduced for recording, lettering will still be legible.

1401 D. *As-builts.*

1. *Subdivision:* As-builts shall include the full set of construction plans with the infrastructure shown as it was actually constructed. The road system shall show actual grades, horizontal and vertical curve data, catch basin locations, etc. The plans shall show the storm sewer system in plan and profile, drainage structure invert elevations, pipe grades, lengths, size of pipes, detention pond outlet works, etc. The detention pond-grading plan shall be shown with a certification that the pond configuration and outlet works were built according to design. The as-builts shall be submitted before approval of the final plan. A reproducible copy of the final plan and two sets of as-builts shall be submitted. A digital copy of the as-built plans shall also be submitted in a format and coordinate system compatible with the city's geographic information system.
2. *Individual commercial/industrial sites:* As-builts shall include the full set of construction plans with the improvements shown as it was actually constructed. Normally the as-builts are the original construction plans modified to reflect the actual construction. The plans shall include grading, entrance locations, pavement layout, striping, curb and gutter, storm sewers in plan and profile, building location(s), etc. Detention facilities grading and outlet works shall be shown with a certification that the pond complies with the original design. A digital copy of the as-built plans shall also be submitted in a format and coordinate system compatible with the city's geographic information system.

1402. ACCESS TO PROPERTY

Openings for vehicular access to lots from public streets, referred to as curb cuts or driveways, shall be regulated by the public works and utilities department in accordance with the following requirements:

1402 A. Size and spacing.

In no case shall a curb cut or other access point be less than ten feet or more than 30 feet in width. Except in residential zoning districts no two curb cuts or other access points shall be closer than 50 feet from each other.

1402 B. Location.

At street intersections, no curb cut or other access points shall be located closer than 35 feet from the intersecting point of the street right-of-way lines.

1402 C. Visibility.

At any street intersection or at the intersection of any private driveway with a street, no fence, wall, sign, planting or other structure or object shall be permitted or maintained that will form an impediment to the point of intersection of the driving surfaces.

1402 D. Visibility at intersections.

On corner lots no fence, shrubbery or other obstruction to the traffic sight vision, except utility poles or traffic lights or sign standards shall exceed a height of three feet within a triangular area formed by the intersection of the right of way lines of two streets or a street intersection with a railroad right of way line and a diagonal line which intersects the right of way lines at two points each a minimum of 20 feet distance from the intersection of the right of way lines, or in the case of a rounded corner, from the point of intersection of their tangents; provided however, signs, lights or similar objects which are totally located at least ten feet above the finished grade shall be permitted.

1402 E. Permit required.

No person shall be authorized to open any curb cut, grade or otherwise make any improvements upon the public right-of-way of any street, road or highway, except with approval of the public works and utilities department. The city reserves the right to require the applicant to indemnify and hold the city harmless for any injury or damage to public utilities and improvements existing within said right-of-way over which any driveway or other improvement is to be built. The city further reserves the right to require the property owner, at his expense, to remove any permitted improvement or to relocate or repair the same as necessary for the maintenance and future improvement of said right-of-way, including the location, relocation, repair or removal of utilities existing therein.

1402 F. New subdivision or developments fronting upon the state highway system.

Whenever a new subdivision or development is proposed, which fronts the state highway system and requires access therefrom, no final approval of the site plan shall be given by the City of Griffin until the developer has submitted the final plat to the Georgia Department of Transportation, received approval and submitted this approval to the planning and development department. The time limitations for final approval of a final subdivision or development under this ordinance shall not be deemed to begin until such approval has been granted.

1403. STREET DESIGN CRITERIA

1403 A. AASHTO standards.

Road design shall conform to AASHTO (American Association of State Highway and Transportation Officials) requirements, unless otherwise noted.

1403 B. Minimum design speed and maximum grade.

Minimum design speeds and maximum grades for proposed streets in the City of Griffin by street classification shall be as follows:

Table 14. 1 Minimum design speed and maximum grade

Street Type	Maximum Allowable Grade	Minimum Required Design Speed
Arterial	8%	55 MPH
Major Collector	10%	45 MPH
Minor Collector	15%	35 MPH
Unclassified	18%	25 MPH
Alleys	Varies	Varies

1403 C. Minimum street grade

Minimum grade on cul-de-sacs shall be 1.5 percent to maintain one percent in curb lines.

1403 D. Sight distance at entrances to new development.

1. The sight distance along existing city roads at proposed entrances for both subdivisions and individual commercial/industrial sites shall be designed according to "A Policy on Geometric Design of Highways and Streets", most current edition, by AASHTO. The design professional should refer to the chapter entitled "At-Grade Intersections", and the "Sight Distance" section of this chapter.
2. A general guide is provided in the Standard Detail SSD-1 for sight distances at entrances. This guide does not relieve the design professional from complying with all aspects of AASHTO sight distance requirements for entrance designs.
3. Each traffic movement through the intersection should be checked for vertical and horizontal sight distance. Any object high enough above the roadway to constitute an obstruction should be shown on the plans and noted to be removed or lowered. Such obstructions include signs, ground cover (vegetation), cut slopes, hedges, buildings, etc.

1403 E. Minimum length of vertical curves.

Interior subdivision streets - crest vertical curves K = 10, sag vertical curves, K = 20. Curve length equals the product of the K valve and the algebraic difference in the road grades. Minimum vertical curve length shall be 100 feet.

1403 F. Widening for development entrances.

1. The following widening is required for new developments in both subdivision and individual commercial/industrial site development entrances.

Table 14. 2 Widening for development entrances

Street Classification	Street Width (ft.)	Required R/W (ft.)
Arterial	24+	50+
Major Collector	24	40
Minor Collector	20	30
Local	12	25

2. Street width is measured from centerline to the edge of the pavement.
3. Right-of-way is measured from the existing centerline.
4. Lane length is measured 150 feet from tangent point of radius to beginning of taper. Tapers are 50 feet. Vertical curb and gutter is required through the radii. The additional lane can be stopped at the projected property line if there is inadequate right-of-way, excessive cut or fills to install the lane. In this case, the tapers would start at the projected property line unless excessive cut or fills would encroach on the right-of-way limits of the abutting property.
5. Paving section shall correspond to the street classification of the existing road the entrance connects to:
   a. Arterial—Industrial paving section
   b. Major collector—Industrial paving section
   c. Minor collector—Commercial paving section
   d. Local—Commercial paving section
6. The cost of any catch basins, which must be constructed when an existing city or county road is required to be modified, will be paid by the developer.
7. Existing storm sewers located in the area of the entrance widening shall be extended and connected to the proposed storm sewer system at the developer's expense.
8. See standard detail drawings for widening at entrances.

1403 G. Residential street section.

1. Residential streets shall be a minimum of 22 feet of paved width within the curb and gutter. There shall be a minimum shoulder section behind both curbs as shown in the standard detail drawings and based on the city's sidewalk requirements.
2. Pavement width shall be no less than as follows:

Table 14. 3 Residential street section

Street Types	Minimum Pavement Width
Arterial	As may be required
Major Collector	12 ft. lanes + curb & gutter
Minor Collector	24 ft. + curb & gutter
Local	22 ft. + curb & gutter

3. See typical residential curbing detail.

4. Cul-de-sac radius shall be as shown in the standard detail drawings.

1403 H. Industrial/commercial streets.

1. Pavement width for industrial/commercial streets shall be no less than as follows:

Table 14. 4 Industrial/ commercial streets

Type Street	Minimum Right-of-way	Minimum Pavement Width
Arterial	100 feet	52 ft. + w/13+ foot lane
Major Collector	80 feet	52 ft. w/13 foot lane
Minor Collector	80 feet	28 ft. w/14 foot lane

2. Paving standard shall be as shown in standard detail drawings for industrial/commercial streets.

3. See typical industrial curbing detail in standard detail drawings.

4. Cul-de-sac radius shall be as shown in the standard detail drawings.

1403 I. Dam supporting road.

No city road shall be designed to cross an existing or proposed dam.

1403 J. Curbs and gutter.

Curb and gutter shall be required on all paved streets:

1. *Residential curb and gutter:*

a. Vertical curb and gutter.

b. Typical section shall be 6" X 24" X 12".

2. *Commercial/industrial curb and gutter:*

a. Vertical curb and gutter.

b. Typical section shall be 6" X 24" X 12".

1404. SIDEWALKS.

1404 A. Sidewalks shall be required in all residential, commercial and industrial developments along both sides of the proposed streets. Sidewalks shall also be required along the existing streets on the side adjacent to the development. This requirement may be waived for certain residential streets subject to the type of development.

1404 B. Sidewalks shall be located as shown in the standard detail drawings, but not less than one foot from the property line to prevent interference of encroachment by fencing, walls, hedges or other planting or structures placed on the property line at a later date.

1404 C. Concrete sidewalks shall be a minimum of five feet wide and four inches thick.

1404 D. Sidewalks shall be located on both sides of proposed streets and on existing streets on the side adjacent to the development.

1404 E. Sidewalks shall have a prepared base where necessary and be backfilled and landscaped.

1405. TRAFFIC SIGNS

1405 A. The design professional shall show the location of all required traffic signs. Unless otherwise noted, design of traffic signs shall conform to the Manual on Uniform Traffic Control Devices.

1405 B. Stop signs shall be located from the signs edge six feet off the back of curb or edge of gravel at the beginning of the intersection radius. The sign shall be located on the right side of the intersection. The bottom of the sign shall be at least five feet above the edge of pavement or back of curb. This standard applies to typical residential interior street intersections.

1405 C. All other intersections shall have stop signs located according to the Manual on Uniform Traffic Control Devices.

1405 D. Stop signs shall be sized so that their overall dimensions are 30" X 30".

1405 E. All other signs shall be sized according to the Manual on Uniform Traffic Control Devices.

1406. UTILITY LOCATIONS

All utility locations shall correspond to the typical layout shown in the standard detail drawings.

1407. BRIDGE PILING

Shall be driven to state highway load standards for loading. Certification of pile load shall be by registered professional engineer.

1408. APARTMENTS AND CONDOMINIUMS

Streets shall be constructed to residential street standards as set forth in these specifications.

1409. MOBILE HOME PARKS

Streets shall be constructed to residential street standards as set forth in these specifications.

1410. SITE DESIGN FOR INDIVIDUAL COMMERCIAL/ INDUSTRIAL LOTS

1410 A. Entrance design.

1. See above sections "sight distance at entrances to new development", "widening for development entrances" and "individual commercial/industrial sites - development entrances."
2. Width of entrances shall be limited to those shown in the standard design drawings. Entrances with several lanes for different traffic movement with concrete or painted islands shall be reviewed on a case-by-case basis.
3. Spacing of entrances and distance of entrances to property lines shall be limited to distances shown in the standard design drawings.
4. Entrances shall comply with valley gutter requirements shown in the standard detail drawings (GA DOT Standard 9031U).

1410 B. Proposed grading.

1. Proposed grading shall have positive drainage.

2. Swales lined with grass or stone shall be designed with a minimum 1.0 percent slope. Concrete lined swales shall be designed with a minimum 0.5 percent slope.
3. Embankment Slopes. The design of embankment slopes is dependent upon the type of soil encountered at each site. A soils engineer must be employed to design slopes and slope stabilization for slopes steeper than the following:
   a. Maximum cut slopes should be no steeper than 2:1.
   b. Maximum fill slopes should be no steeper than 2.5:1.

1410 C. Automobile parking.

1. Automobile parking shall be designed with maneuvering aisles and parking spaces to the minimum dimensions as shown in the standard detail drawings.
2. The number of parking spaces required for each development shall be as required in the City of Griffin Zoning Ordinance.
3. Paved automobile parking. All off-street automobile parking, accesses and maneuvering aisles shall be paved.
4. Parking for the handicapped shall be designed as shown in the standard detail drawings.

1410 D. Retaining walls.

Retaining walls shall be designed by a registered engineer qualified to do structural design.

1411. STORM DRAIN DESIGN CRITERIA

1411 A. This section provides maximum and minimum values, and methodologies accepted by the City of Griffin Stormwater Department in the preparation of stormwater drainage plans. The latest edition of the Stormwater Design Manual, prepared for the City of Griffin Public Works and Stormwater Department shall be consulted for the proper design procedures in meeting the standards of this section.

1. Sizing and location of all existing and proposed storm sewers shall be the responsibility of a professional engineer registered in the State of Georgia.
2. Storm drainage pipes shall be sloped so as to maintain a minimum velocity of three fps during the two-year storm event so that sediment will not collect.
3. The Rational Method shall be used for calculating discharges for storm sewers draining less than or equal to 25 acres. The SCS method or USGS regression equations may be used for calculating discharges for storm sewers draining over 25 acres.
4. The 25-year storm event shall be used in sizing storm drains that serve public streets and rights-of-way. Storm sewers and culverts conveying water under public streets shall be sized to carry runoff from the 100-year storm event without overtopping the road. All other storm-sewer systems shall be sized for the 50-year storm event. The storm sewer system shall be designed for subcritical gravity flow such that the system is not flowing under pressure flow during the design storm. The hydraulic grade line shall be delineated on the construction drawings. Storm sewer systems shall not be designed using Manning's Equation alone. A "standard step" procedure must be utilized.
5. Storm sewers shall not be less than 18 inches in diameter. No storm drain can be under proposed acceleration/deceleration lanes. The city, upon recommendation, by the city engineer may modify or waive this requirement if unusual circumstances exist such as topography.
6. Storm drainage shall be collected in storm sewers at or near the perimeter of the property on the upstream end and piped to an existing storm drainage system. This extension requirement can be waived for collection of storm water upstream of roadways where topographic conditions warrant placing the inlet at the toe of the roadway fill.
7. Maximum continuous length of pipe shall be 300 feet for pipes less than 42 inches in diameter.
8. Drainage easements shall be at least 20 feet wide along all storm drain systems and around all detention ponds.

9. Exit velocities from storm-drain pipes shall not exceed four fps during the 25-year storm event without the design of additional energy dissipaters (not including required rip-rap).
10. It is the developer's and/or the contractor's responsibility to ensure that all structures built on individual lots or sites have positive drainage and are built at an elevation to adequately avoid being flooded by the 100-year storm and that runoff from their project does not adversely affect downstream or upstream property. The city is not responsible for damages resulting from improper design or inadequate runoff control.
11. Maximum velocity of runoff in swales lined with vegetation shall be 5.0 feet/second during the 25-year storm event. Swales with runoff velocities in excess of 5.0 fps shall be lined with stone, concrete, or approved synthetic matting.

1411 B. Drainage structures (excluding pipe or culverts)

The design professional shall check the hydraulic capacity of each drainage structure designed as an inlet point in the drainage system. The actual storm water flows shall be compared with the structures flow capacity to ensure the capacity is not exceeded.

1. Catch basins shall be designed by the design professional to State Highway Standards 1033D and/or 1034D. Alternate catch basins complying with the standards of the Georgia DOT are subject to approval by the city.
2. Catch basins shall be located outside of intersection radii unless unusual circumstances cause undue hardship, in which case the city may waive this requirement.
3. Catch basin spacing shall be limited to a maximum distance as follows:
   a. 500 feet on grades up to seven percent
   b. 400 feet on grades from seven percent to ten percent
   c. 250 feet on grades over ten percent

   Maximum gutter spread shall be one-half of the travel lane, as measured from the face of curb, for the 25-year storm event. The inlets shall be spaced in order to intercept a minimum of 85 percent of the flow during the 25-year storm event without exceeding the above gutter spread.
4. The outlet end of all storm drain pipes (except driveway pipe) shall have either flared-end sections or concrete headwalls, which meet GA DOT Standards 1120 or 1125. This same standard applies to the inlet end of storm sewers where an open pipe is designed to collect the runoff.
5. Drop inlets shall be designed to GA DOT Standards 1019A. Weir drop inlets shall be provided in landscape areas. Grated drop inlets shall be provided in paved areas.
6. Junction boxes or manholes having access to the pipe shall be constructed to meet the requirements of State Standard 9031U or 1011A. Manholes shall be provided with eccentric cone sections.
7. Detention pond riser structures shall be designed to Georgia DOT standards. These structures shall be checked for flotation.

1411 C. Storm detention facilities.

All development plans will require a hydrology study certified by a professional engineer registered in the State of Georgia qualified to do work in the field of hydrology. Permanent detention facilities are required for every development project that has an increase in post-development discharges.

1. Detention ponds shall be designed for the two-, five-, ten-, 25-, 50-, and 100-year storm events. The SCS Method is the only acceptable method that can be used for developing hydrographs to be used for detention pond routing.
2. An emergency overflow device (which does not include the throttling device) for a detention pond shall be designed to pass the 100-year peak developed inflow without overtopping the dam. There shall be at least 1.0 feet of free board between the 100-year elevation in the emergency spillway and the top of the dam.
3. Pond discharge locations shall be in defined drainage ditches. The developer's engineer shall include in the hydrology study a discussion of existing conditions downstream of the detention pond and an explanation of how downstream property owners will not be

adversely affected by the "concentrated" runoff. If there is an existing storm drainage system within 150 feet of the discharge point of the outlet pipe for the pond, then the developer shall extend the outlet pipe and tie-in to the existing system.

4. The steepest fill slopes shall be 2.5:1, and cut slopes shall be no steeper than 2:1. Vegetated embankments shall be less than 20 feet in height. Riprap-protected embankments shall be no steeper than 2:1. Geotechnical slope stability analysis is recommended for embankments greater than ten feet in height and is mandatory for embankment slopes steeper than those given above. All embankments must be designed to State of Georgia guidelines for dam safety. The maximum depth shall not exceed ten feet.
5. If the City of Griffin Stormwater Department determines that the detention pond poses a significant safety hazard, then the detention pond shall be fenced around the 100-year elevation. The fence shall be at least four feet in height with a 14-foot wide gate. Adequate access must be provided for construction equipment and a drainage easement of at least 20 feet in width must be delineated around the pond on the final subdivision plat.

1411 D. Subdrainage.

Will be installed to control the surplus ground water by intercepting sidehill seepage or by lowering or regulating the ground water level where such conditions exist.

1411 E. Bridges.

Bridges shall be designed for a 100-year storm event.

1411 F. Lake(s).

If it is proposed to make a new or existing lake a part of a subdivision, the developer shall be required to submit a breach analysis for affected property within the boundaries of the development and show the dam breach zone on the plans.

1412. MATERIALS

All materials shall comply with GA DOT Standard Specifications Construction of Roads and Bridges with Supplemental Specifications and Standard Details current edition, unless noted otherwise.

1412 A. Streets.

1. *Graded aggregate base course*. The base course shall consist of mineral aggregate and may be a combination of natural deposit or a blend of the materials specified. All materials are subject to approval by the city engineer. If a blend of materials is used, it shall be blended through a base plant, which meets the latest specifications of the Georgia State Highway Department specification 815.
2. *Black base*. The base course shall consist of asphaltic concrete as approved by the city engineer and shall conform to applicable specifications of the Georgia State Highway Department.
3. *Prime*. After the base has been placed, mixed, compacted, shaped, inspected and accepted, it shall be primed with suitable asphaltic materials as specified in DOT Specification 412.
4. *Tack*. Tack coat shall be applied on a prepared road surface according to the requirements of Georgia DOT Specification 413.
5. Roadway surfaces. After the prime has been inspected and accepted, the roadway or street shall be surfaced with an asphaltic concrete wearing surface. No surface treatment pavement as a finished wear surface will be accepted. All asphaltic concrete will be mixed in an asphalt plant meeting the latest requirements of the Georgia State Highway Department.

1412 B. Curbs and gutter.

1. *Residential*. Concrete shall be Class "A" as defined by GA DOT and have a minimum compressive strength of 3,000 psi at 28 days.

2. *Commercial/industrial.* Concrete shall be Class "A" as defined by GA DOT and have a minimum compressive strength of 3,000 psi at 28 days.

1412 C. Storm sewer pipe.

1. State Highway Standard 1030D shall be used in determining class concrete or gauge of pipe under fill.
2. A certification by the supplier of the pipe specifications for each pipe shall be required before installation.
3. Concrete pipe shall be reinforced.
4. Reinforced concrete pipe shall be used under all public streets, where pipe slopes are less than one percent, and for all live streams. Double wall high density polyethylene pipe may be used in all other instances.

1412 D. Storm drainage structures (excluding storm sewer pipe).

The materials used for storm drainage structures shall comply with the standards of the GA DOT.

1413. CONSTRUCTION

All construction shall comply with GA DOT Standard Specifications Construction of Road and Bridges, with Supplemental Specifications and Standard Details, current edition, unless noted otherwise.

1413 A. Clearing and grubbing.

The entire area within the typical grading section shall be cleared and grubbed of all trees, bushes, stumps and debris. Such debris shall be disposed of in a lawful manner. There shall be no burial in the road right-of-way.

1413 B. Grading.

1. Grading shall be accurately done to the lines and grades shown on the plans. Embankments shall be placed in uniform layers not to exceed six inches and compacted to a density of 95 percent of the maximum laboratory dry weight per cubic foot as determined by AASHTO Method T-99. If necessary in order to obtain this compaction, the contractor shall add moisture to the material as it is placed.
2.

Table 14. 5 Grading

Depth of Cut or Fill	Cut Slopes	Fill Slopes
2 feet or less	4 to 1	4 to 1
2 feet to 5 feet	3 to 1	3 to 1
5 feet to 10 feet	2 to 1	2 to 1
Over 10 feet	2 to 1	2 to 1

The depth of cut referred to above shall be constructed to the maximum cut or fill occurring in any one section of cut or fill. The slope on cut of fill slopes shall be uniform throughout for each section of cut or fill. When a cut is made in rock that requires blasting, the slope may be changed to vertical slope upon the written approval of the subdivision administrator.

3. Typical grading section shall be as shown in the standard detail drawings.
   a. Shoulder section behind curb on typical streets shall be as shown in the standard detail drawings.

1413 C. Subgrade.

1. After the earth work has been completed, all storm drainage and other underground utilities have been installed under the roadbed and the backfill in all such ditches thoroughly compacted, the subgrade shall be brought to the lines, grades and cross section shown on the plans.

2. If any sections of the subgrade are composed of unsuitable or unstable material, such material shall be removed to the depth directed by the authorized representative of the city and replaced with suitable, material and compacted to 90 percent minimum.
3. When the street is to be used for construction traffic before the paving work is completed, a layer of #3 stone can be laid as a traffic surface if the developer so desires.
   a. This material shall not be used as part of the base material.
   b. It may be worked into the subgrade; or it shall be removed before the base course is set up for paving.
   c. Provision shall be made to drain low points in road construction when the final paving surface is delayed.
      i. Provide break in the berm section when the curbing has not been constructed.
      ii. Use 2½ inch or six-inch pipe sections to provide drainage under curb to side slopes.

1413 D. Curbs and gutter.

1. Line and grade shall be set by developer's engineer, landscape architect, or surveyor.
2. One-half inch expansion joints or pre-molded bitumastic expansion joint material shall be provided at all radius points and at intervals not to exceed 50 feet in the remainder of the curb and gutter.

1413 E. Street cuts.

1. All trenches shall be backfilled and compacted the same day the trench is opened. Backfill in trenches within the right-of-way shall be compacted to 95 percent of the maximum laboratory dry density. In addition, the top one-foot of backfill to be located under pavement and curbs shall be compacted to 100 percent of the maximum laboratory dry density. The top one-foot of backfill is as measured from the bottom of the graded aggregate base to one-foot below that surface.
2. The city's policy is no existing city roads can be open cut unless unusual circumstances warrant it. Storm sewers 36 inches or smaller shall be bored. Contact the city for permission to open cut any existing city road. If the city allows open cutting, all trenches under existing paving shall be backfilled and compacted in six-inch lifts and excavated to allow for concrete and asphalt to be placed as shown in the standard detail drawings. The edges of the paving cut shall be saw cut smooth.

1413 F. Underground utilities.

1. All utilities located within street rights-of-way within the curbs shall be installed and the ditches backfilled and thoroughly compacted as stated in section 1406 before any pavement or base is installed. All utilities otherwise located within street rights-of-way, shall be installed and ditches backfilled and compacted to 95 percent of the maximum laboratory dry density.
2. All utility manholes and valve boxes shall be brought to the finished grade within the roadway section.

1413 G. Shoulders and easements.

All shoulders and easements shall be clear of limbs and debris, graded smooth and established in grass.

1413 H. Foreign material on streets.

1. The developer, builders, and/or homeowners shall be responsible for keeping dirt, mud, building materials, concrete, etc. off of the pavement and curbing of existing city or county roads during construction of buildings in all developments covered by these regulations.
2. Before the streets are accepted by City of Griffin, all litter and trash shall be removed from the dedicated rights-of-way and surrounding areas.

1413 I. Storm sewers.

Pipe installation shall conform to GA DOT Standard Specifications for construction of roads and bridges.

1. Before any traffic over a storm drain is allowed, the developer shall provide an adequate depth and width of compacted backfill to protect the structure from damage or

displacement. Any debris or silt that constricts the flow through a pipe shall be removed by the developer as often as necessary to maintain drainage. All pipe structures shall be cleaned before the work is conditionally approved. Any damage or displacement that may occur due to traffic or erosion shall be repaired or corrected at the developer's expense.

2. Minimum clearances are:
   a. One foot between the bottom of the base or sub-base, if used, and the exterior crown of the culvert.
   b. A minimum of 0.5 foot between underground utilities and exterior crown of culverts.
3. Trench construction for storm drainage pipe shall be in accordance with State Highway Standard 1030D and current manufacturer's specifications. A typical detail shall be provided on the construction drawings.
4. The storm sewer bedding shall be designed according to the latest manufacturer's specifications and a typical detail shall be provided on the construction drawings.
5. All pipe joint connections and connections to manholes shall be made according to the latest manufacturer's specifications. At a minimum all connections to manholes shall be grouted with cement.

1414 INSPECTION AND TESTS

1414 A. Scope.

This section pertains to the inspection and testing of road and storm sewer construction.

1414 B. Testing.

1. All tests shall comply with Standard Specifications Construction of Roads and Bridges by the GDOT, most current edition.
2. Compaction testing shall be done on road embankments, trench backfill and road subbase.
3. Asphalt testing including coring for pavement thickness and asphalt extraction tests shall be done for roads.

1414 C. Contractor qualifications.

1. Licensing and safety. All contractors who work on water systems that will be owned by the City of Griffin must be licensed in accordance with State of Georgia law and local ordinance. Compliance with applicable safety regulations is the responsibility of each company engaged in the work; the city assumes no responsibility for the actions of others on the job site. It is the responsibility of those installing water mains and related appurtenances to conform to OSHA regulations, 29 CFR Part 1926, Subpart P, Paragraph 1926.650 through 1926.653. Publications from OSHA can be obtained by contacting OSHA Publications Distribution, Washington, D.C.
2. Contractors performing road and storm sewer construction must be approved by the city and should be completely familiar with the procedures and contract requirements associated with this type project.
3. Unsatisfactory work may result in the loss of privilege to obtain a permit for future work in the City of Griffin.

1414 D. Construction inspection.

1. *Responsibility for inspection.* The developer's contractor will be responsible for the quality, accuracy and workmanship of his completed work. In addition, the developer shall employ a qualified professional (this shall normally be the same design professional who prepared the plans for the work) to review the quality of work as required during construction and to oversee the various tests and inspection points that are specified herein.

   City personnel will visit the job site on a periodic basis and will make spot checks, as they deem appropriate. The City of Griffin shall have the right to review and inspect all construction and may reject any work that does not meet quality control standards.

2. *Access to project.* Authorized representatives of the City of Griffin, which may include city employees, the city engineering consultant, state or federal agencies, shall have access to the site for inspection at any time.
3. *Communications during construction.* All written communications regarding road and storm sewer construction will be to:

   Director of Public Works and Utilities
   City of Griffin
   P. O. Box T
   Griffin, GA 30224
   Phone No. 770-229-6424 - Fax No. 770-229-6439

   The developer, contractor(s) and the developer's professional responsible for inspection will be required to attend a pre-construction conference with the city. At the pre-construction conference, the contractor will submit to the city, in writing, the date they propose to begin construction. The contractor will provide notification by phone any time the work is to be vacated and will provide notice by phone prior to resuming work.

   The applicable city departments may have informal verbal communications with the contractor foreman or superintendent at any time during construction. The city will not direct the actions of contractor's workmen.
4. *Concealed work.* The contractor shall notify the city and receive inspection approval prior to concealing certain work such as storm sewers and bedding, storm drainage structures, road fill, etc.
5. *Minimum inspection by developer's professional.* The following minimum inspections and tests will be performed and certified by the professional who is employed by the developer to perform quality control checking on the construction work.
   a. *Roadway embankment compaction testing.* Frequency of testing shall be determined by project conditions. Testing schedule and locations subject to approval by the city. Areas failing compaction test shall be reworked as necessary until compaction is achieved.
   b. *Storm sewer trench backfill compaction testing.* At least two (2) tests per road crossing. Random testing for storm sewers in road shoulders. Any areas failing the compaction tests shall be reworked as necessary to achieve compaction.
   c. *Sub-base compaction testing and test rolling.* Compaction tests of the sub-base should be done randomly not exceeding 500 feet apart. In addition, the road sub-base shall be test rolled with the city inspector present. Areas failing compaction testing shall be reworked until compaction is achieved.
   d. *Asphalt pavement.* The asphalt shall be cored for thickness at random locations not exceeding 500 feet apart. Extraction testing shall be done on the asphalt to ensure compliance with GA DOT Specifications for the asphalt section required. Areas with failing asphalt tests shall be corrected by a method approved by the city.
   e. *Concrete.* Testing for concrete shall be done where concrete is used on the project for retaining walls, culverts and headwalls and bridges. Testing shall include slump tests, compressive strength tests and air entrainment tests. Testing shall comply with GA DOT testing standards for concrete.

1414 E. Final inspections and conditional acceptance.

The developer's professional responsible for inspection of construction will provide the city with an affidavit after he completes his inspection, testing and submittal of as-built drawings and easements. This affidavit must certify that all specified inspections and tests have been made and successfully passed and that the work has been completed in substantial accordance with the approved plans and specifications. After receipt of this affidavit, the city will schedule a final inspection. A representative of the developer's professional and the contractor will be present during this final inspection. This final inspection will generally include spot checks of storm sewers, drainage system, drainage easements, roads and a complete overview of the project.

After any discrepancies are corrected, the city will issue a letter certifying conditional acceptance of the water system. This letter shall commence the start of the 24-month warranty period, which is required of the contractor.

On projects having phased development, this letter will allow the developer to apply for a permit for the next phase of development.

At the end of 24 months, the city will re-inspect the entire development. When any discrepancies have been corrected, the city will issue an acceptance letter and will begin perpetual maintenance and operation of the roads and storm sewer system within the right-of-way.

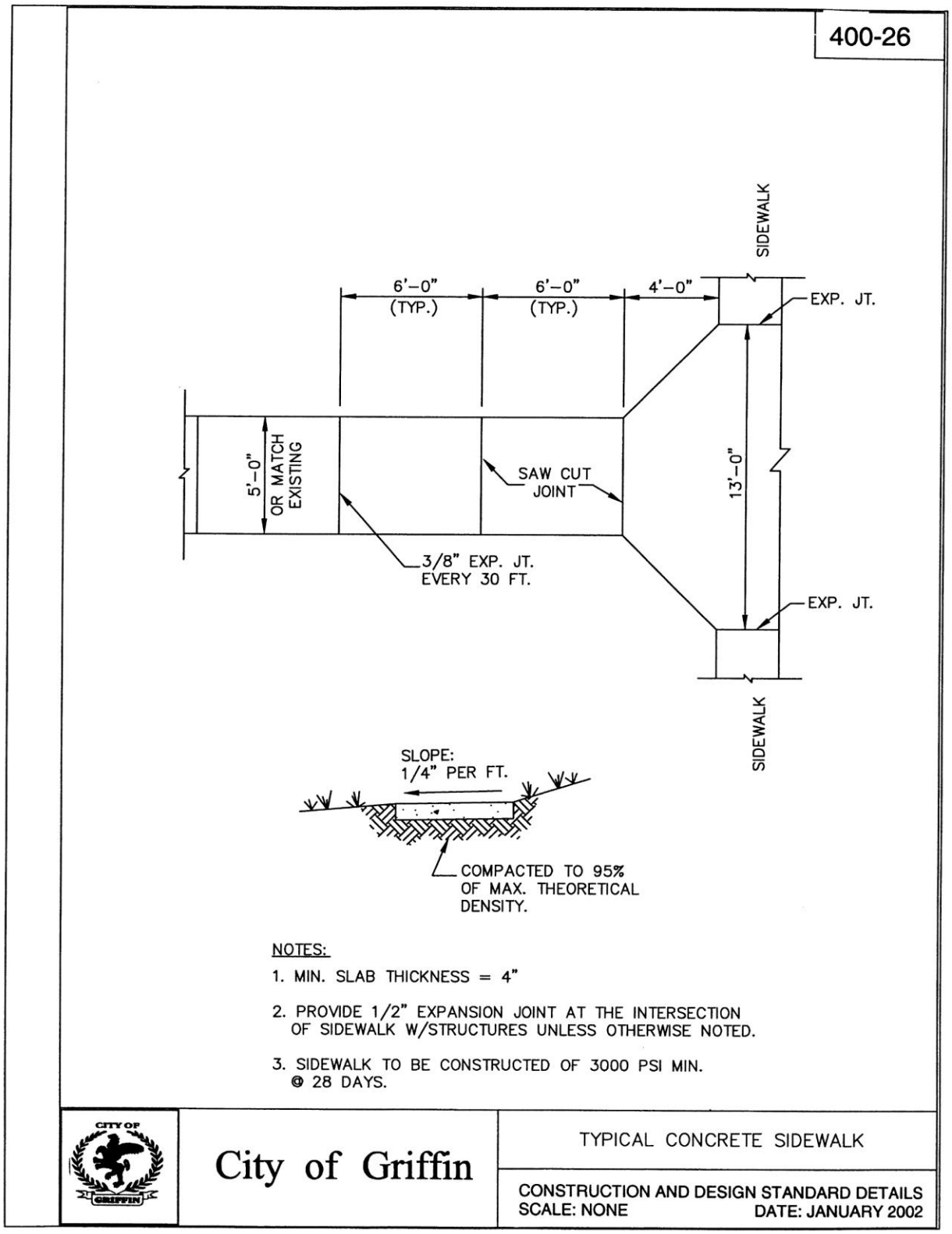

14. 1 TYPICAL CONCRETE SIDEWALK

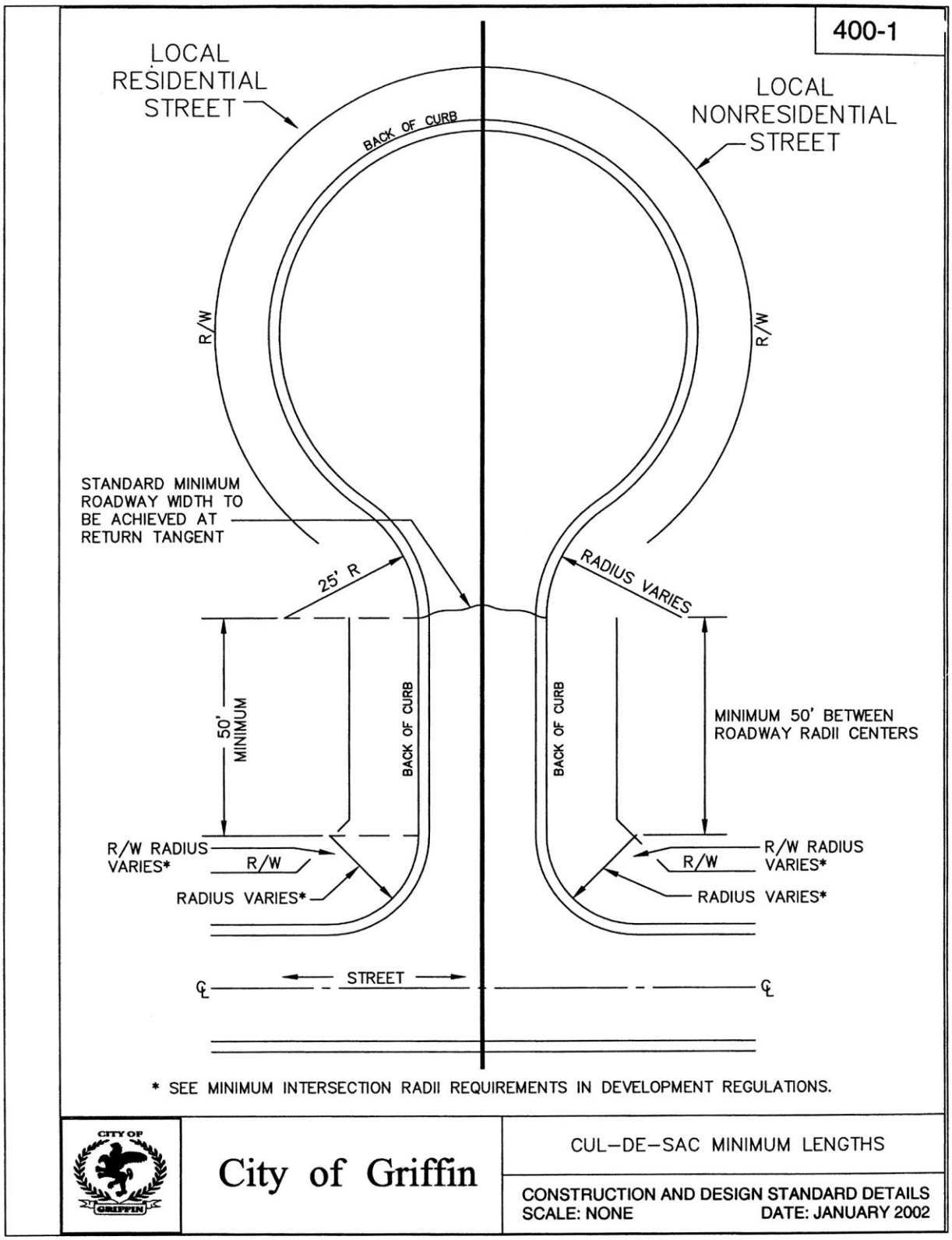

14. 2 CUL-DE-SAC MINIMUM LENGTHS

400-2

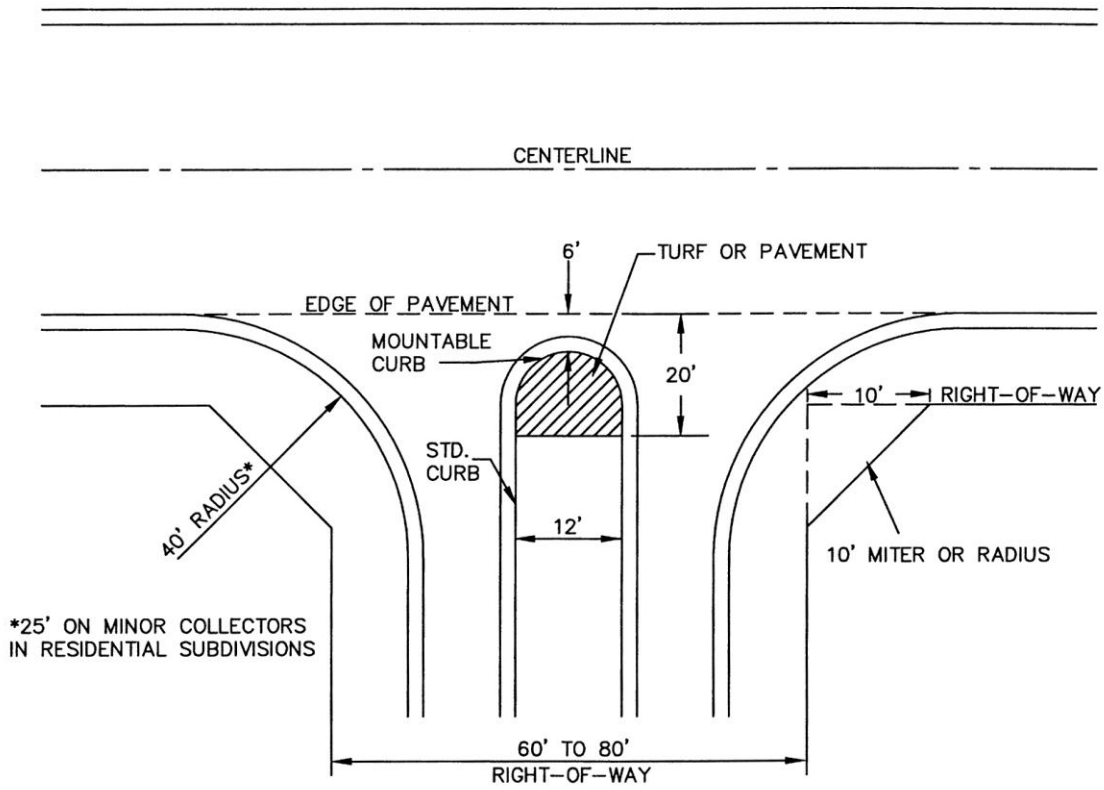

NOTE: NO MEDIAN WITH 60' R/W.

NOTES:

1. INSIDE OF ISLANDS ARE TO BE BACKFILLED WITH PORTLAND CEMENT CONCRETE, OR GRASSED, OR PLANTED WITH VEGETATION NOT EXCEEDING TWENTY-FOUR INCHES IN HEIGHT.
2. DEVELOPER TO MAINTAIN GRASSED OR PLANTED ISLAND
3. LARGER RADII FOR RIGHT-OF-WAY OR ROADWAY CONNECTIONS MAY BE REQUIRED FOR STREETS INTERSECTING AT ANGLES LESS THAN 90 DEGREES.

City of Griffin

"T" INTERSECTION – COLLECTOR/ARTERIAL

CONSTRUCTION AND DESIGN STANDARD DETAILS
SCALE: NONE DATE: JANUARY 2002

14. 3 "T" INTERSECTION- COLLECTOR/ ARTERIAL

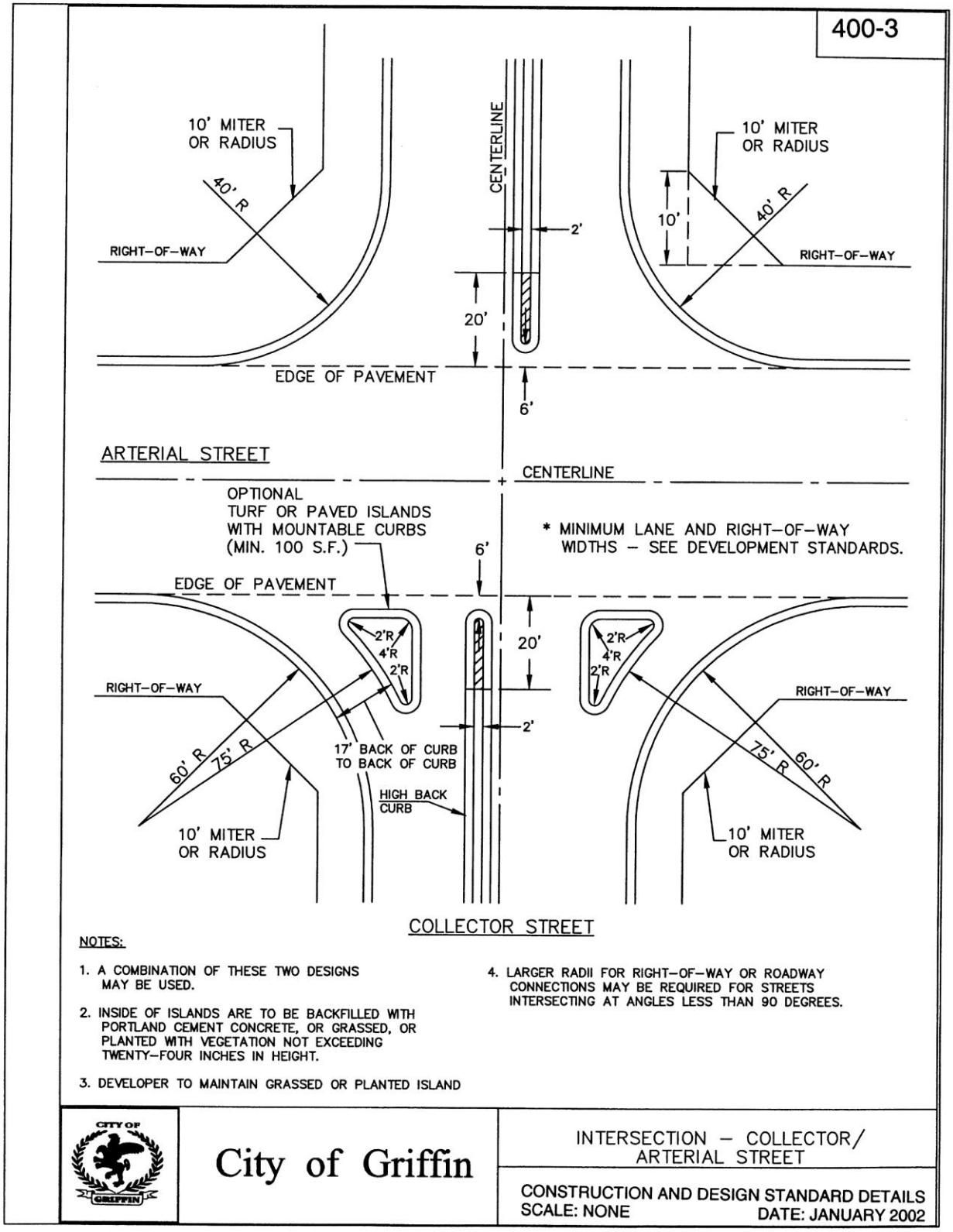

NOTES:

1. A COMBINATION OF THESE TWO DESIGNS MAY BE USED.
2. INSIDE OF ISLANDS ARE TO BE BACKFILLED WITH PORTLAND CEMENT CONCRETE, OR GRASSED, OR PLANTED WITH VEGETATION NOT EXCEEDING TWENTY-FOUR INCHES IN HEIGHT.
3. DEVELOPER TO MAINTAIN GRASSED OR PLANTED ISLAND
4. LARGER RADII FOR RIGHT-OF-WAY OR ROADWAY CONNECTIONS MAY BE REQUIRED FOR STREETS INTERSECTING AT ANGLES LESS THAN 90 DEGREES.

City of Griffin

INTERSECTION – COLLECTOR/ ARTERIAL STREET

CONSTRUCTION AND DESIGN STANDARD DETAILS
SCALE: NONE DATE: JANUARY 2002

14. 4 INTERSECTION - COLLECTOR/ ARTERIAL STREET

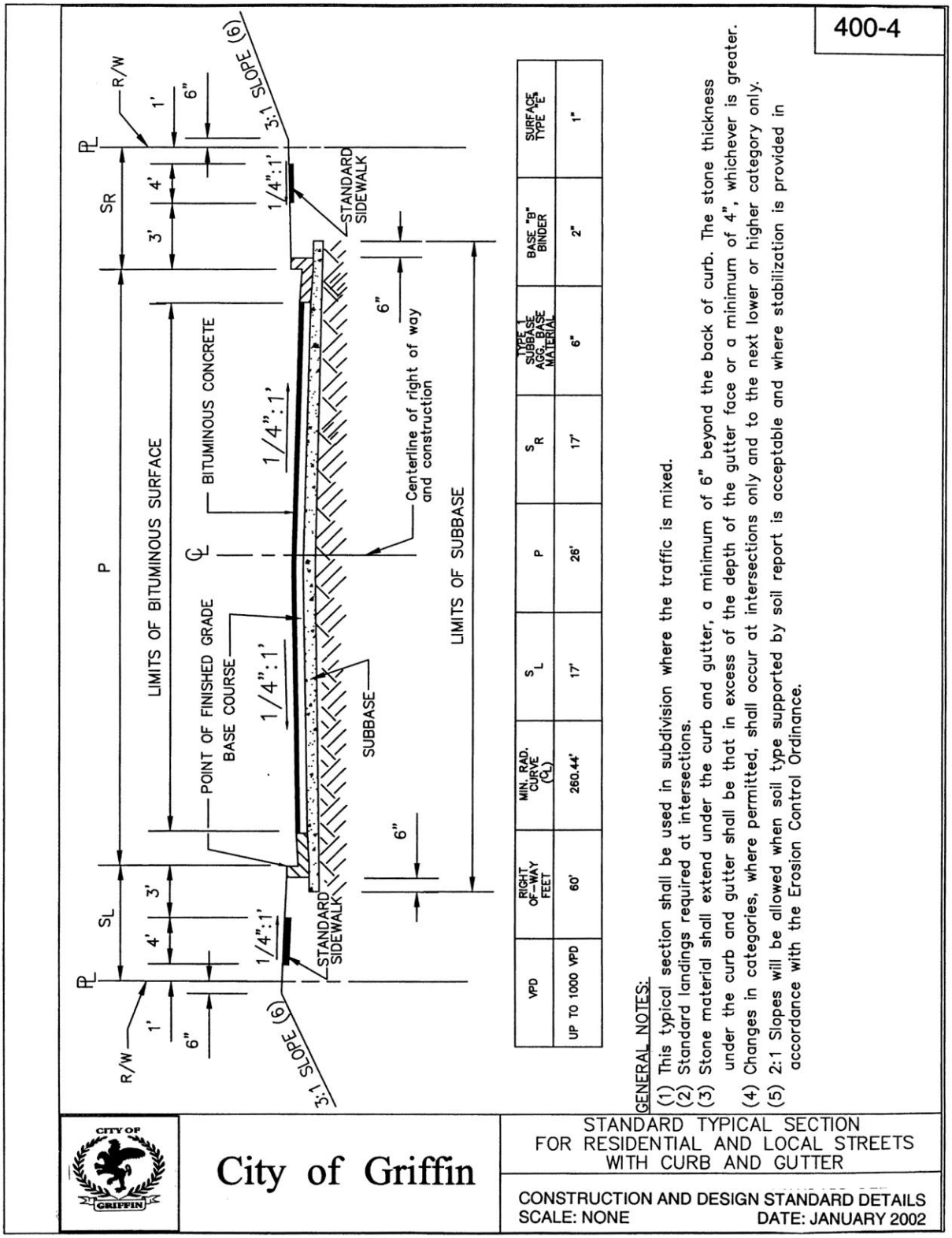

VPD	RIGHT OF-WAY FEET	MIN. RAD. CURVE (℄)	S_L	P	S_R	TYPE 1 SUBBASE AGG. BASE MATERIAL	BASE "B" BINDER	SURFACE TYPE "E"
UP TO 1000 VPD	60'	260.44'	17'	26'	17'	6"	2"	1"

14. 5 STANDARD TYPICAL SECTION FOR RESIDENTIAL AND LOCAL STREETS WITH CURB AND GUTTER

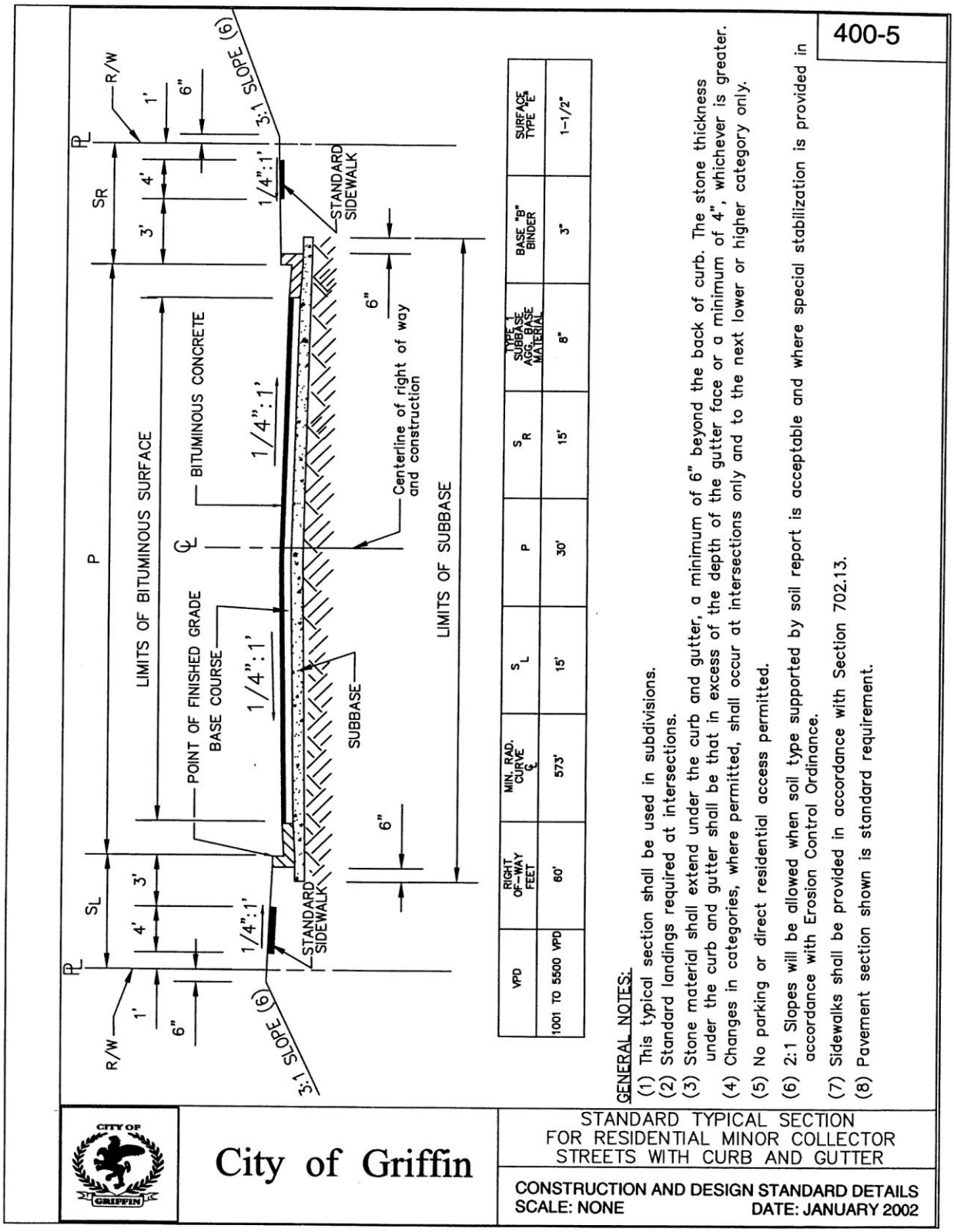

VPD	RIGHT OF-WAY FEET	MIN. RAD. CURVE ℄	S_L	P	S_R	TYPE 1 SUBBASE AGG. BASE MATERIAL	BASE "B" BINDER	SURFACE TYPE "E"
1001 TO 5500 VPD	60'	573'	15'	30'	15'	8"	3"	1-1/2"

GENERAL NOTES:

(1) This typical section shall be used in subdivisions.
(2) Standard landings required at intersections.
(3) Stone material shall extend under the curb and gutter, a minimum of 6" beyond the back of curb. The stone thickness under the curb and gutter shall be that in excess of the depth of the gutter face or a minimum of 4", whichever is greater.
(4) Changes in categories, where permitted, shall occur at intersections only and to the next lower or higher category only.
(5) No parking or direct residential access permitted.
(6) 2:1 Slopes will be allowed when soil type supported by soil report is acceptable and where special stabilization is provided in accordance with Erosion Control Ordinance.
(7) Sidewalks shall be provided in accordance with Section 702.13.
(8) Pavement section shown is standard requirement.

City of Griffin

STANDARD TYPICAL SECTION
FOR RESIDENTIAL MINOR COLLECTOR
STREETS WITH CURB AND GUTTER

CONSTRUCTION AND DESIGN STANDARD DETAILS
SCALE: NONE DATE: JANUARY 2002

14. 6 STANDARD TYPICAL SECTION FOR RESIDENTIAL MINOR COLLECTOR STREETS WITH CURB AND GUTTER

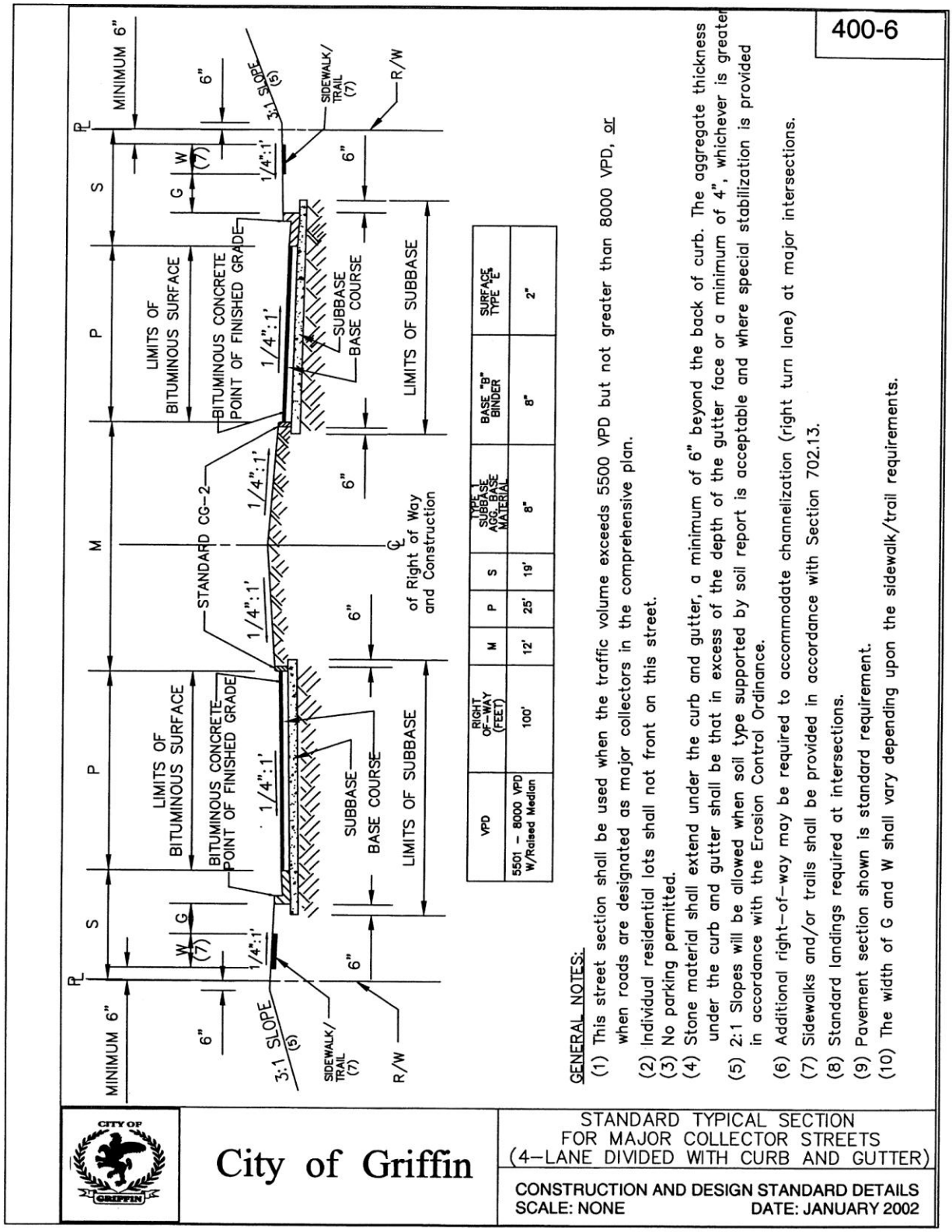

14. 7 STANDARD TYPICAL SECTION FOR MAJOR COLLECTOR STREETS (4-LANE DIVIDED WITH CURB AND GUTTER)

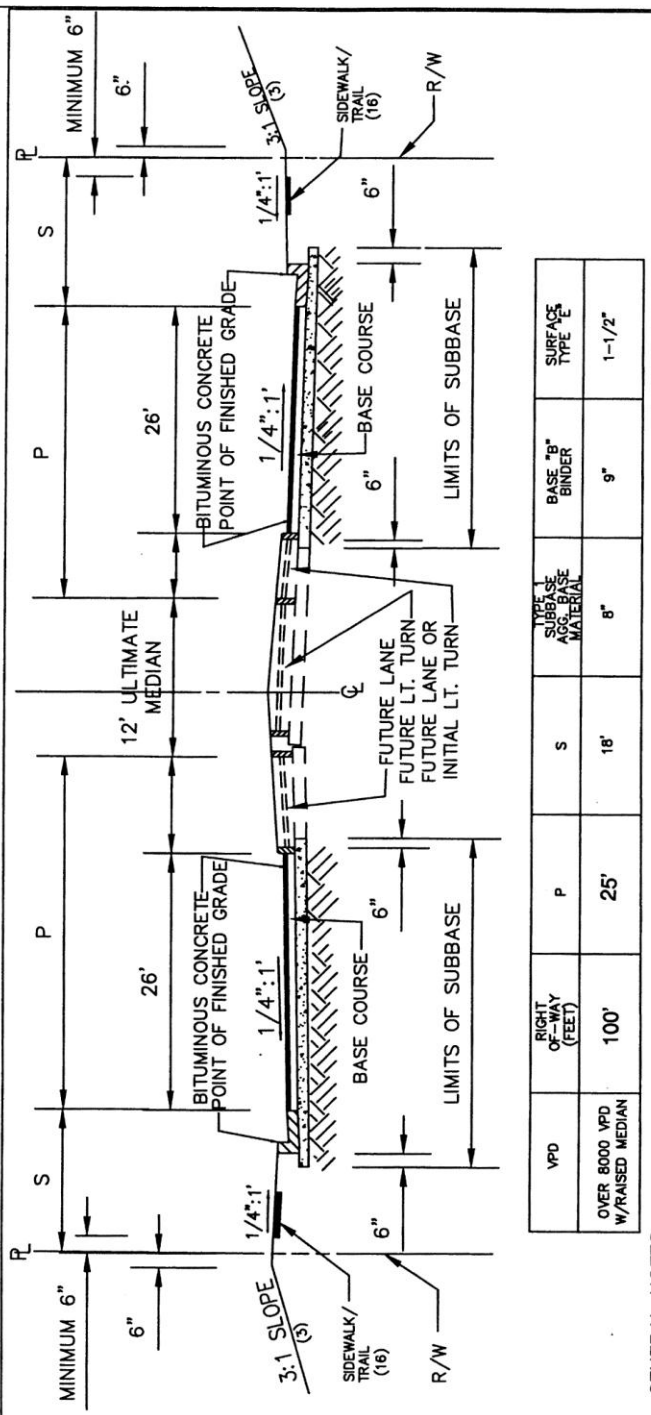

VPD	RIGHT OF-WAY (FEET)	P	S	TYPE 1 SUBBASE AGG. BASE MATERIAL	BASE "B" BINDER	SURFACE TYPE "E"
OVER 8000 VPD W/RAISED MEDIAN	100'	25'	18'	8"	9"	1-1/2"

400-7

GENERAL NOTES:

(1) This street section shall be used when the traffic volume exceeds 8000 VPD or when roads are designated as minor arterial by the Comprehensive Plan.
(2) Slope easements Not included in Right-of-way.
(3) 2:1 Slopes will be allowed when soil type supported by soil report is acceptable and where special stabilization is provided in accordance with the Erosion Control Ordinance.
(4) Stone material shall extend under the curb and gutter, a minimum of 6" beyond the back of curb. The aggregate thickness under the curb and gutter shall be that in excess of the depth of the gutter face or a minimum of 4", whichever is greater.
(5) Individual parcels/lots shall not have direct access on this street.
(6) Additional R/W may be required to accommodate channelization (right turn lane) at major intersection.
(7) No parking permitted.
(8) Standard Landings required at intersections.
(9) Sidewalks/Trails shall be provided in accordance with Section 702.13.
(10) Pavement section shown is standard requirement.
(11) Over 15,000 VPD will require construction of 6-Lane Section.

City of Griffin

STANDARD TYPICAL SECTION
FOR MINOR ARTERIAL STREETS
(6-LANE DIVIDED WITH CURB AND GUTTER)

CONSTRUCTION AND DESIGN STANDARD DETAILS
SCALE: NONE DATE: JANUARY 2002

14. 8 STANDARD TYPICAL SECTION FOR MINOR ARTERIAL STREETS (6-LANE DIVIDED WITH CURB AND GUTTER)

400-8

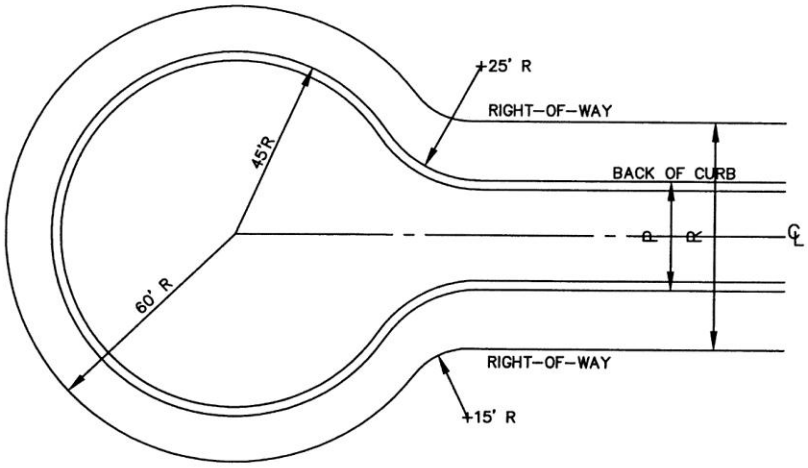

CENTERED

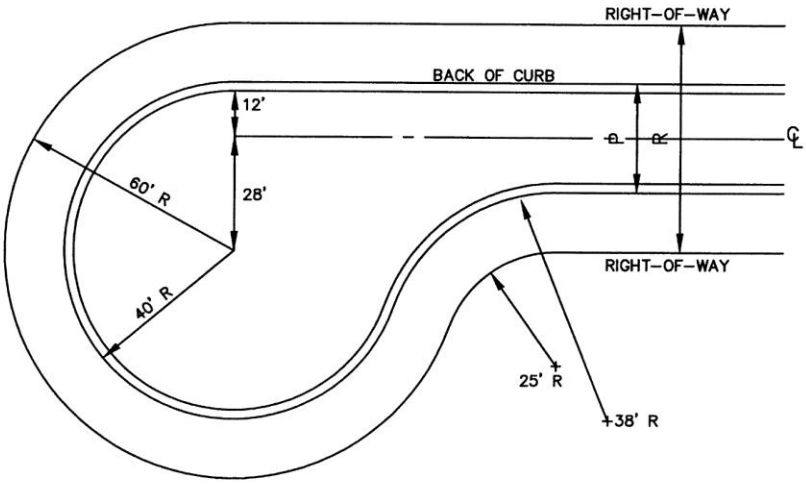

OFFSET LEFT OR RIGHT

NOTES:
(1) LEFT HAND OFFSET SHOWN, RIGHT HAND OFFSET OPPOSITE.
(2) THE WIDTH OF "P" AND "R" SHALL VARY DEPENDING ON THE STREET CATEGORY.

CITY OF GRIFFIN	City of Griffin	STANDARD RESIDENTIAL CUL-DE-SACS
		CONSTRUCTION AND DESIGN STANDARD DETAILS SCALE: NONE DATE: JANUARY 2002

14. 9 STANDARD RESIDENTIAL CUL-DE-SACS

400-9

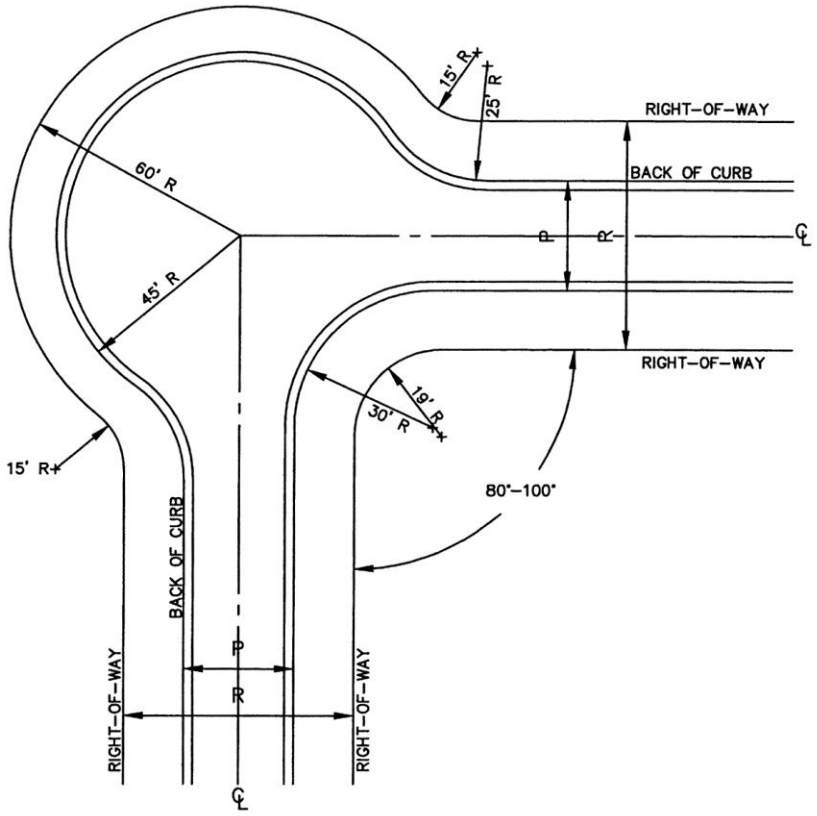

EYEBROW

LOCAL RESIDENTIAL STREETS ONLY

NOTE:

(1) THE WIDTH OF "P" AND "R" SHALL VARY DEPENDING ON THE STREET CATEGORY.

CITY OF GRIFFIN	City of Griffin	STANDARD RESIDENTIAL CUL-DE-SACS
		CONSTRUCTION AND DESIGN STANDARD DETAILS SCALE: NONE DATE: JANUARY 2002

14. 6 STANDARD RESIDENTIAL CUL-DE-SACS

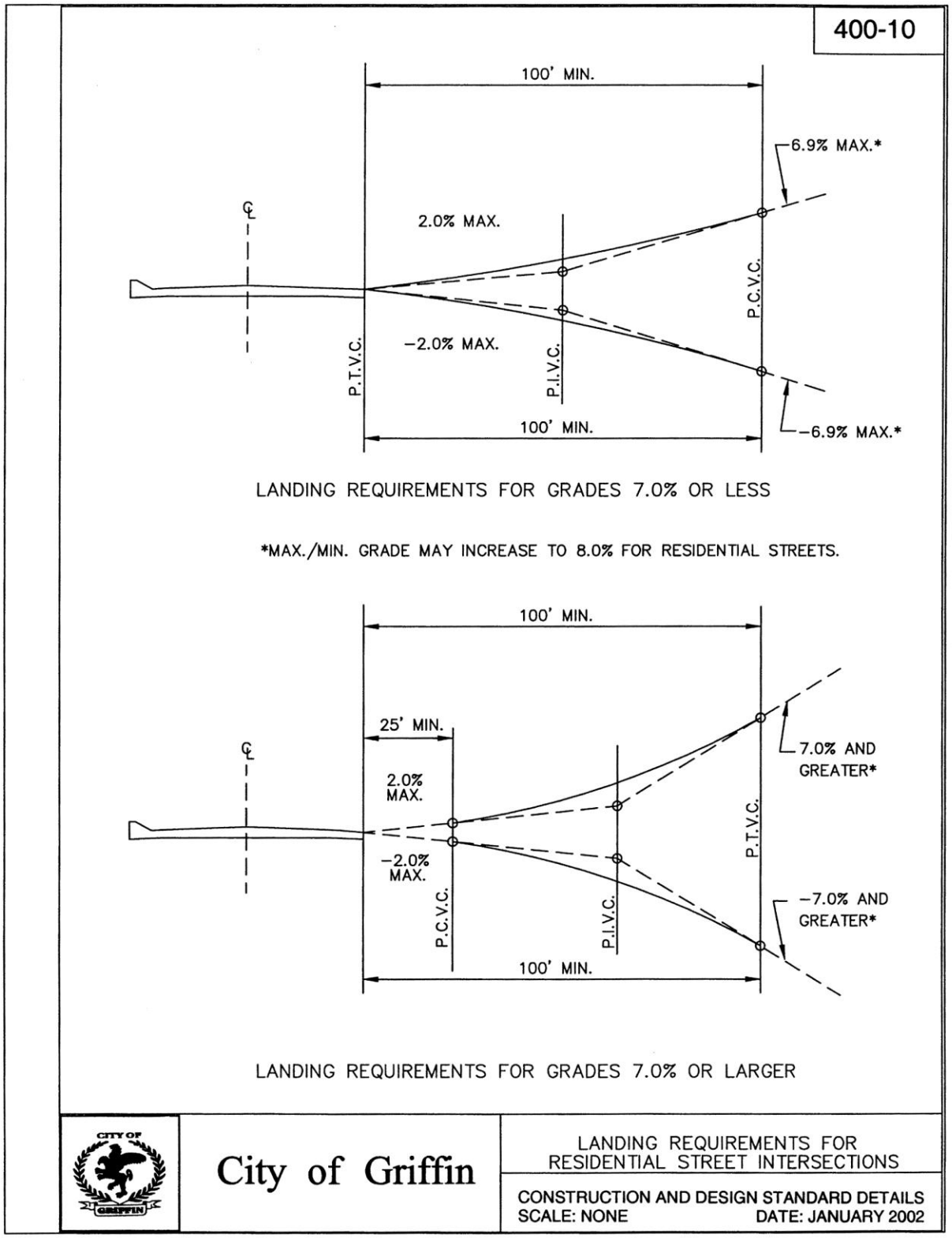

14. 7 LANDING REQUIREMENTS FOR RESIDENTIAL STREET INTERSECTIONS

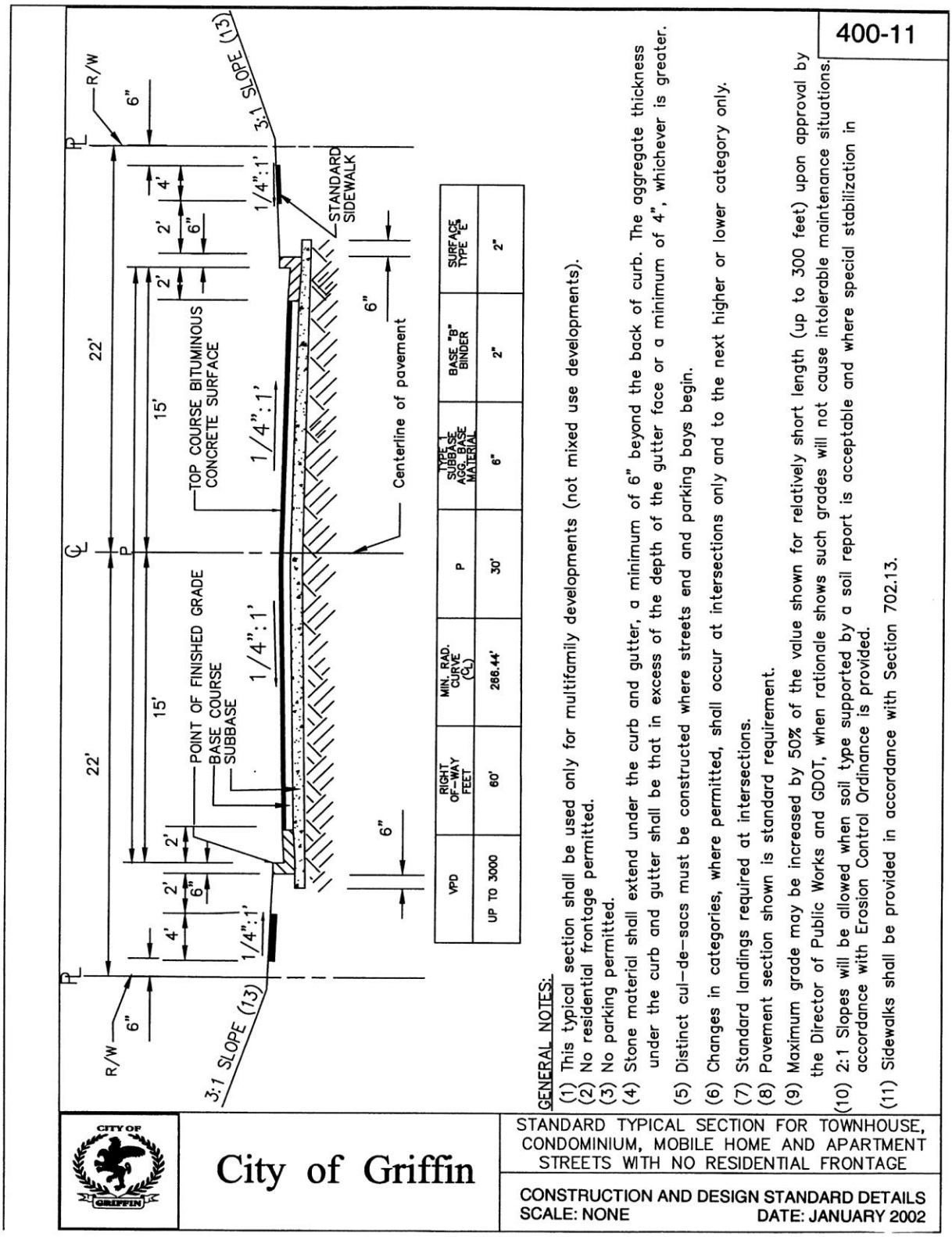

14. 8 STANDARD TYPICAL SECTION FOR TOWNHOUSE, CONDOMINIUM, MOBILE HOME AND APARTMENT STREETS WITH NO RESIDENTIAL FRONTAGE

400-12

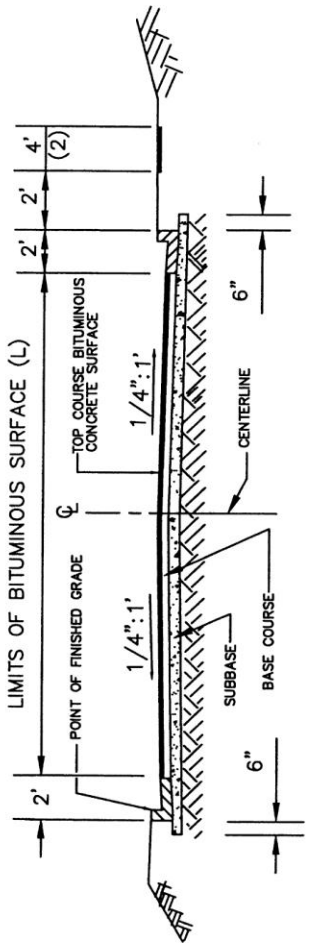

TRAFFIC COUNTS (VPD)	PARKING	L	TYPE 1 SUBBASE	BASE "B" BINDER	SURFACE TYPE "E"
0 – 250	NO PARKING ALLOWED	22'	6"	2"	1"
	PARALLEL (ONE SIDE)	30'	6"	2"	1"
	PARALLEL (BOTH SIDES)	36'	6"	2"	1"
	PERPENDICULAR	22' (1)	6"	2"	1"
251 – 400	PERPENDICULAR	24' (1)	6"	2"	1"
251 – 400	NO PARKING ALLOWED	22'	6"	2"	1"
401 – 600	PARALLEL	30'	6"	2"	1"
401 – 600	PERPENDICULAR	24' (1)	6"	2"	1"
601 – 1000	NO PARKING ALLOWED	24'	6"	2"	1"

GENERAL NOTES:
(1) These dimensions are for travelways only exclusive of parking spaces.
(2) Sidewalk location to be determined during final site plan review.
(3) Stone material shall extend under the curb and gutter, a minimum of 6" beyond the back of curb. The aggregate thickness under the curb and gutter shall be that in excess of the depth of the gutter face or a minimum of 4", whichever is greater.
(4) Maximum grade eight percent (8%).

City of Griffin

RESIDENTIAL PRIVATE STREET STANDARDS

CONSTRUCTION AND DESIGN STANDARD DETAILS
SCALE: NONE DATE: JANUARY 2002

14. 9 RESIDENTIAL PRIVATE STREET STANDARDS

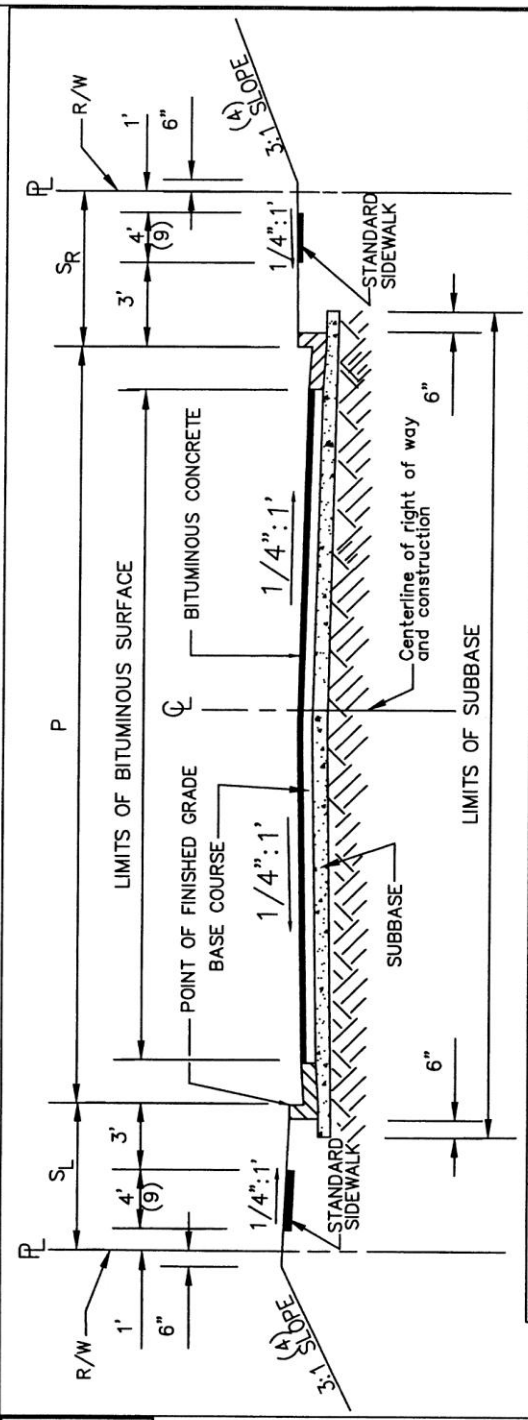

VPD	RIGHT OF-WAY FEET	MIN. RAD. CURVE (℄)	S_L	P	S_R	TYPE 1 SUBBASE AGG. BASE MATERIAL	BASE "B" BINDER	SURFACE TYPE "E"
0 TO 1500 VPD	70'	573'	16'	38'	16'	8"	4"	1-1/2"
1501 TO 5500 VPD	80'	573'	18'	44'	18'	8"	6"	2"

GENERAL NOTES:

(1) This typical section shall be used for all streets within commercial and industrial areas.
(2) No parking allowed along curb.
(3) Stone material shall extend under the curb and gutter, a minimum of 6" beyond the back of curb. The aggregate thickness under the curb and gutter shall be that in excess of the depth of the gutter face or a minimum of 4", whichever is greater.
(4) 2:1 Slopes will be allowed when soil type supported by soil report is acceptable and where special stabilization is provided in accordance with the Erosion Control Ordinance.
(5) Standard landings required at intersections.
(6) Minimum radius for industrial streets only.
(7) Sidewalks are not required in industrial developments but are required on both sides for commercial developments.
(8) Pavement section shown is standard requirement. Refer to Section 650.01 for alternative pavement sections.
(9) In industrial developments with no sidewalks the S_L & S_R are reduced to 12 feet and the right-of-way is reduced to 62 feet and 68 feet respectively.

400-13

City of Griffin

STANDARD TYPICAL STREET SECTION WITH CURB AND GUTTER IN COMMERCIAL AND INDUSTRIAL DEVELOPMENTS

CONSTRUCTION AND DESIGN STANDARD DETAILS
SCALE: NONE DATE: JANUARY 2002

14. 10 STANDARD TYPICAL STREET SECTION WITH CURB AND GUTTER IN COMMERCIAL AND INDUSTRIAL DEVELOPMENTS

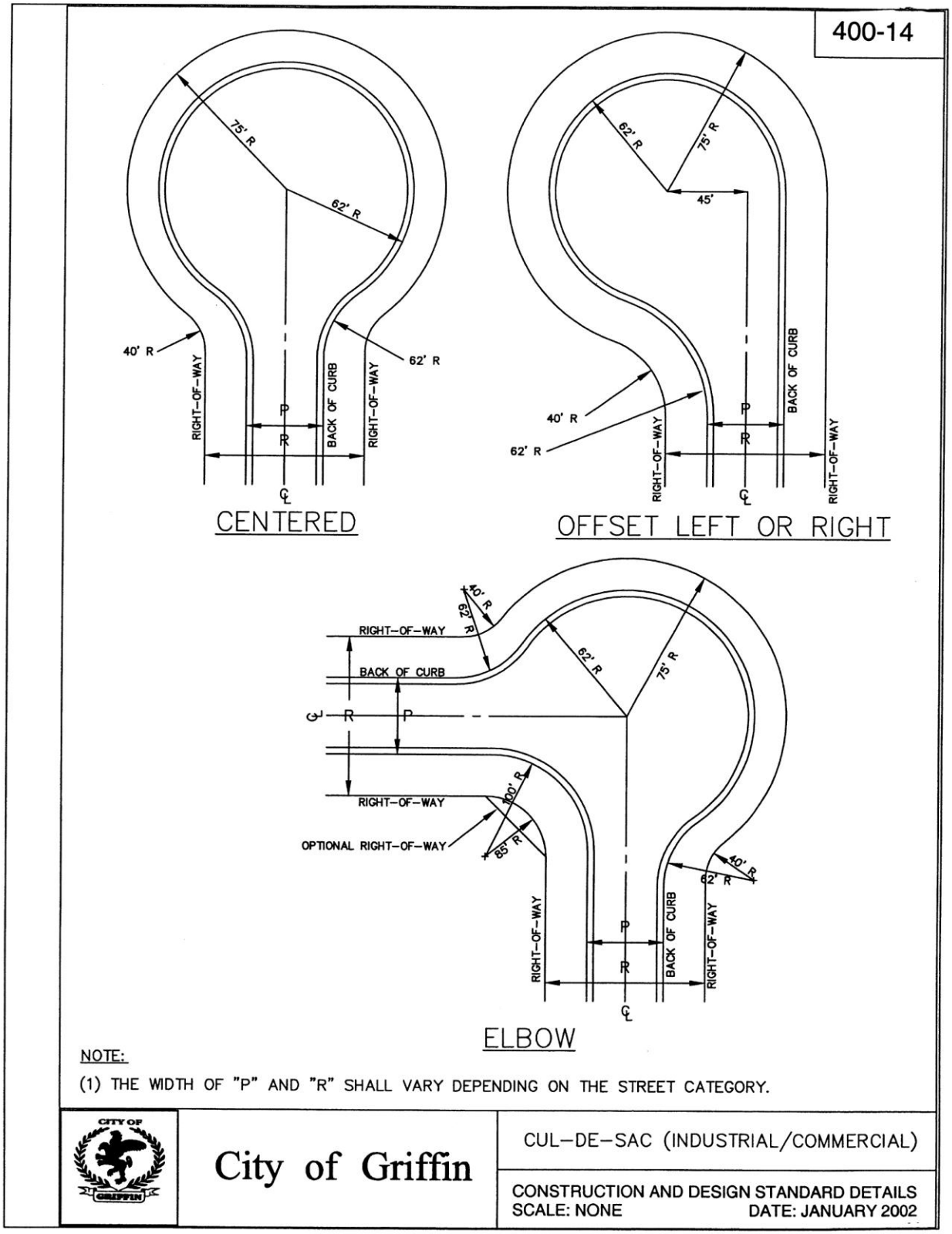

14. 15 CUL-DE-SAC (INDUSTRIAL/ COMMERCIAL)

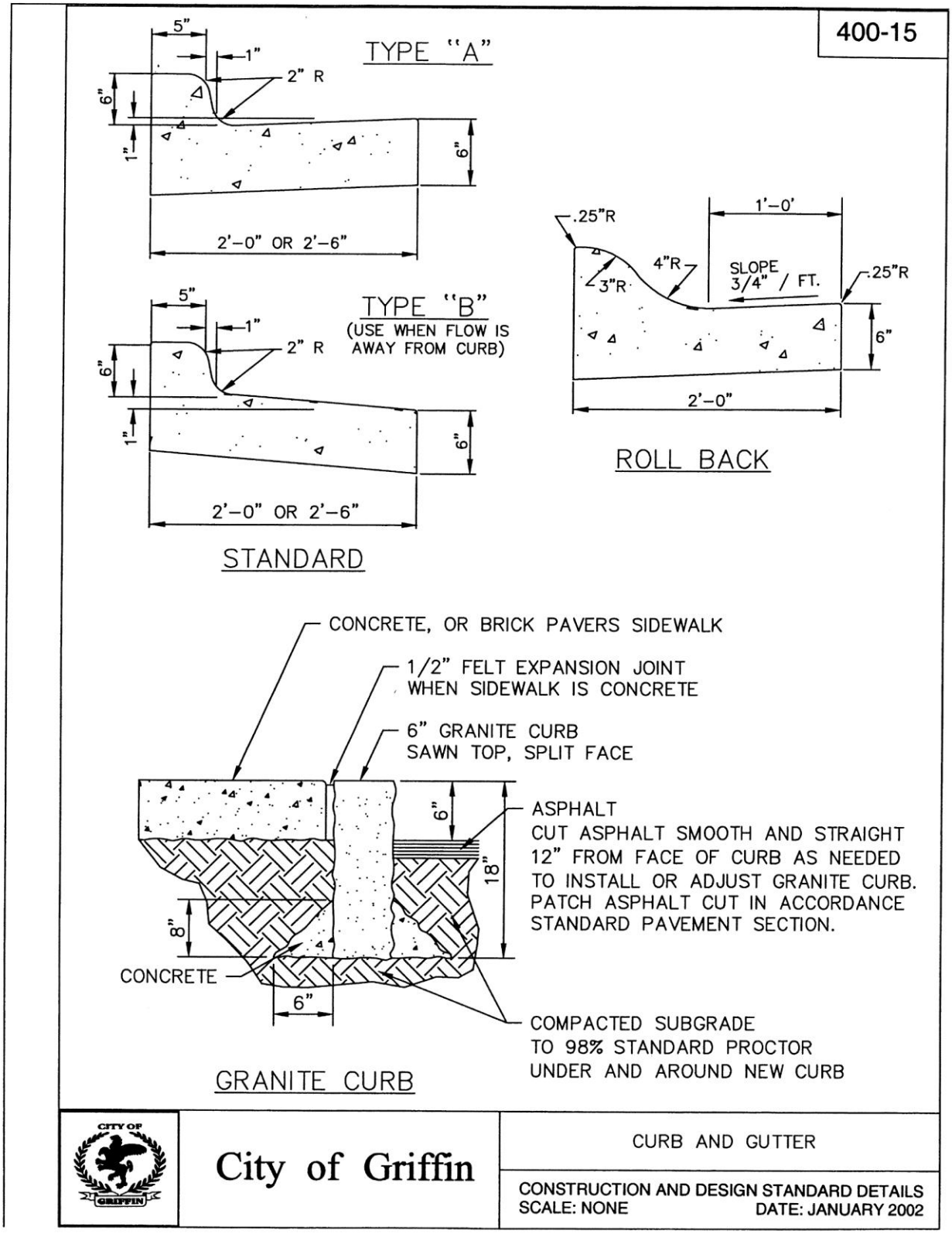

14. 16 CURB AND GUTTER

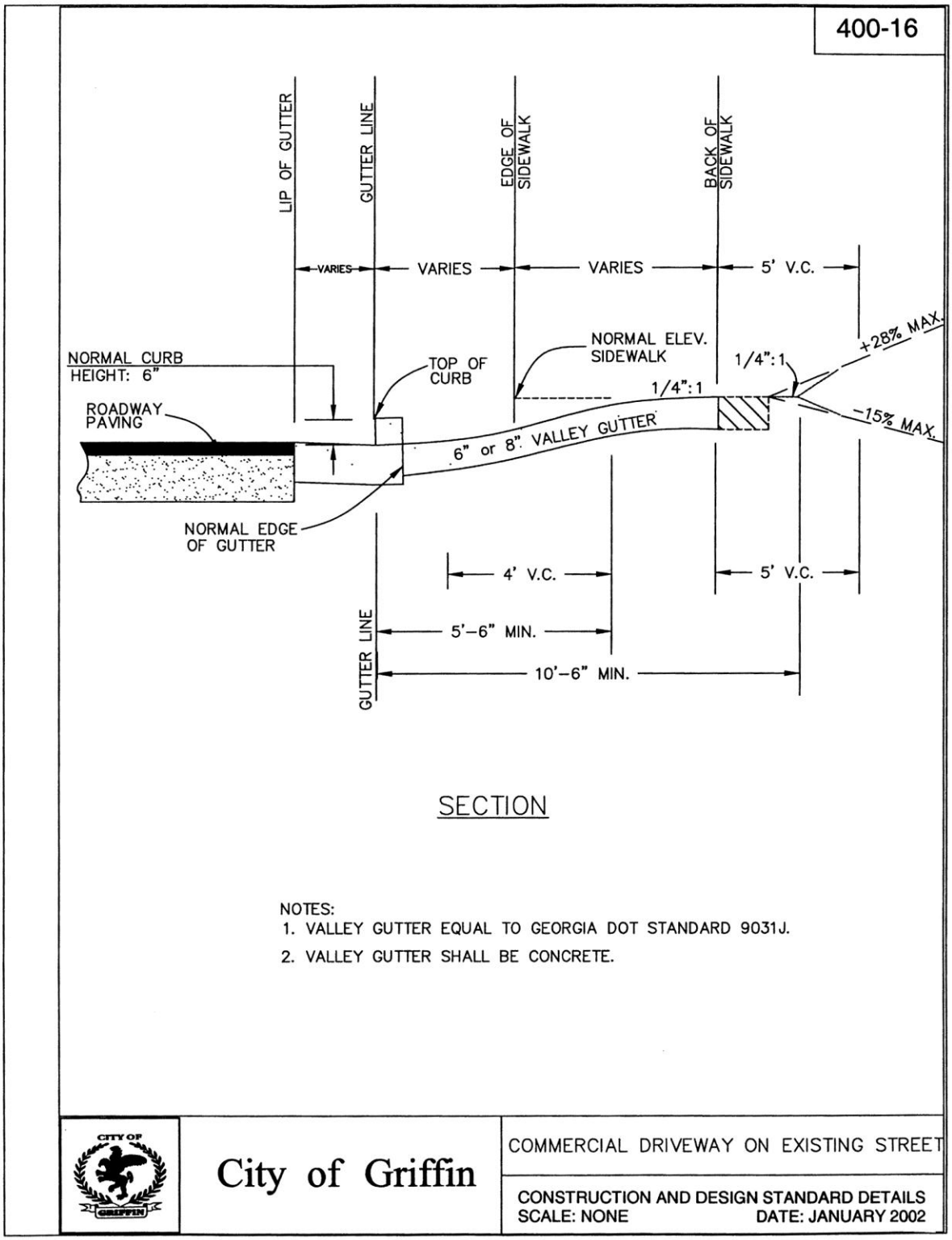

14. 17 COMMERCIAL DRIVEWAY ON EXISTING STREET

400-17

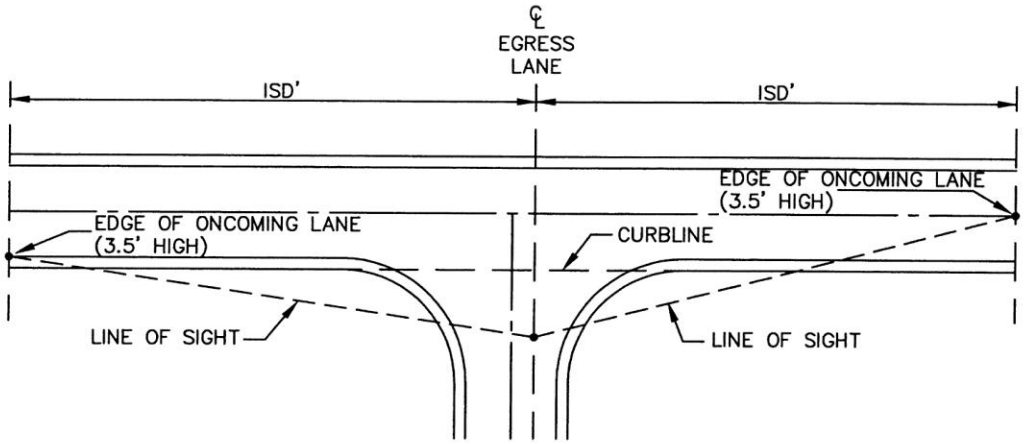

INTERSECTION SIGHT DISTANCE SHALL BE MEASURED FROM A POINT OF BEGINNING ESTABLISHED 10 FEET BEHIND THE BACK OF CURBLINE ON THE CENTERLINE OF THE EGRESS LANE, AT A HEIGHT OF 3.5 FEET ABOVE FINISH GRADE ELEVATION. THE LINE OF SIGHT IS THEN EXTENDED THE MINIMUM REQUIRED DISTANCE TO EITHER SIDE OF THE ABUTTING STREET ALONG THOROUGHFARE TO THE EDGE OF THE ONCOMING TRAFFIC LANE (LANE OF THREAT), TERMINATING AT A POINT 3.5 FEET ABOVE FINISH GRADE ELEVATION. MAINTAIN 0.5 FEET OF CLEARANCE FROM LINE OF SIGHT AND OBSTRUCTION.

STREET TYPE (THOROUGHFARE)	ISD – SIGHT DISTANCE (EACH WAY)
ARTERIAL	475.0'
MAJOR COLLECTOR	350.0'
MINOR COLLECTOR	312.5'
LOCAL	200.0'

City of Griffin

INTERSECTION SIGHT DISTANCE REQUIREMENTS

CONSTRUCTION AND DESIGN STANDARD DETAILS
SCALE: NONE DATE: JANUARY 2002

14. 18 INTERSECTION SIGHT DISTANCE REQUIREMENTS

400-18

ON A CORNER LOT THERE SHALL BE NO FENCE OR WALL OR HEDGE HIGHER THAN 3 FEET, NOR ANY OBSTRUCTION TO VISION OTHER THAN A POST OR COLUMN OR TREE NOT EXCEEDING ONE FOOT IN GREATEST CROSS-SECTIONAL DIMENSION BETWEEN A HEIGHT OF 3 FEET AND A HEIGHT OF 15 FEET ABOVE THE ESTABLISHED GRADE OF EITHER STREET WITHIN AN AREA FORMED BY THE LOT LINES ON THE STREET SIDES OF SUCH LOT AND A LINE JOINING THE POINTS ON SUCH LOT LINES LOCATED AT A DISTANCE OF 15 FEET FROM THE POINT OF THEIR INTERSECTION.

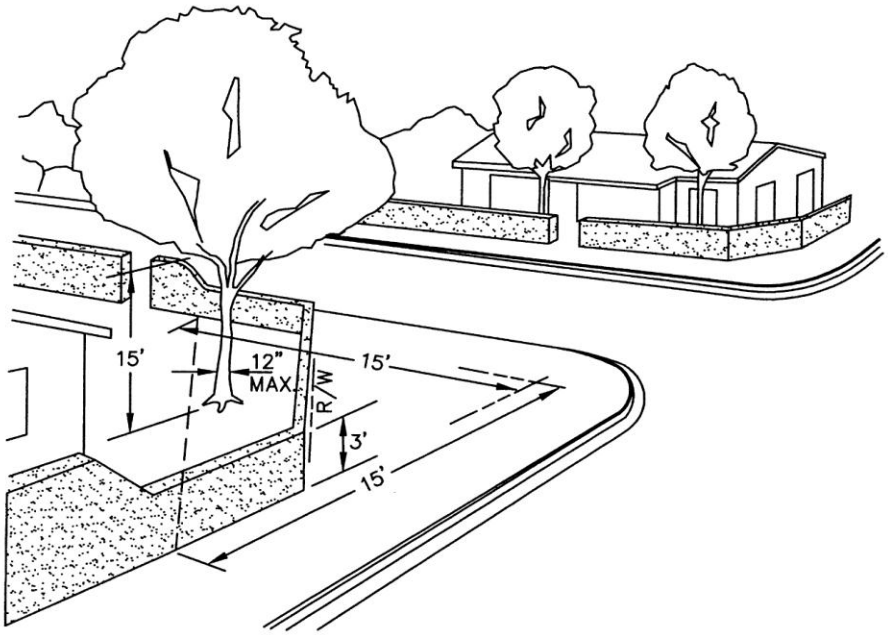

NOTE: MINIMUM INTERSECTION SIGHT DISTANCE REQUIREMENTS SHALL BE MET REGARDLESS OF BLOCK OUT ZONE.

CITY OF GRIFFIN	City of Griffin	SUBDIVISION ENTRANCE SIGHT DISTANCE
		CONSTRUCTION AND DESIGN STANDARD DETAILS SCALE: NONE DATE: JANUARY 2002

14. 19 SUBDIVISION ENTRANCE SIGHT DISTANCE

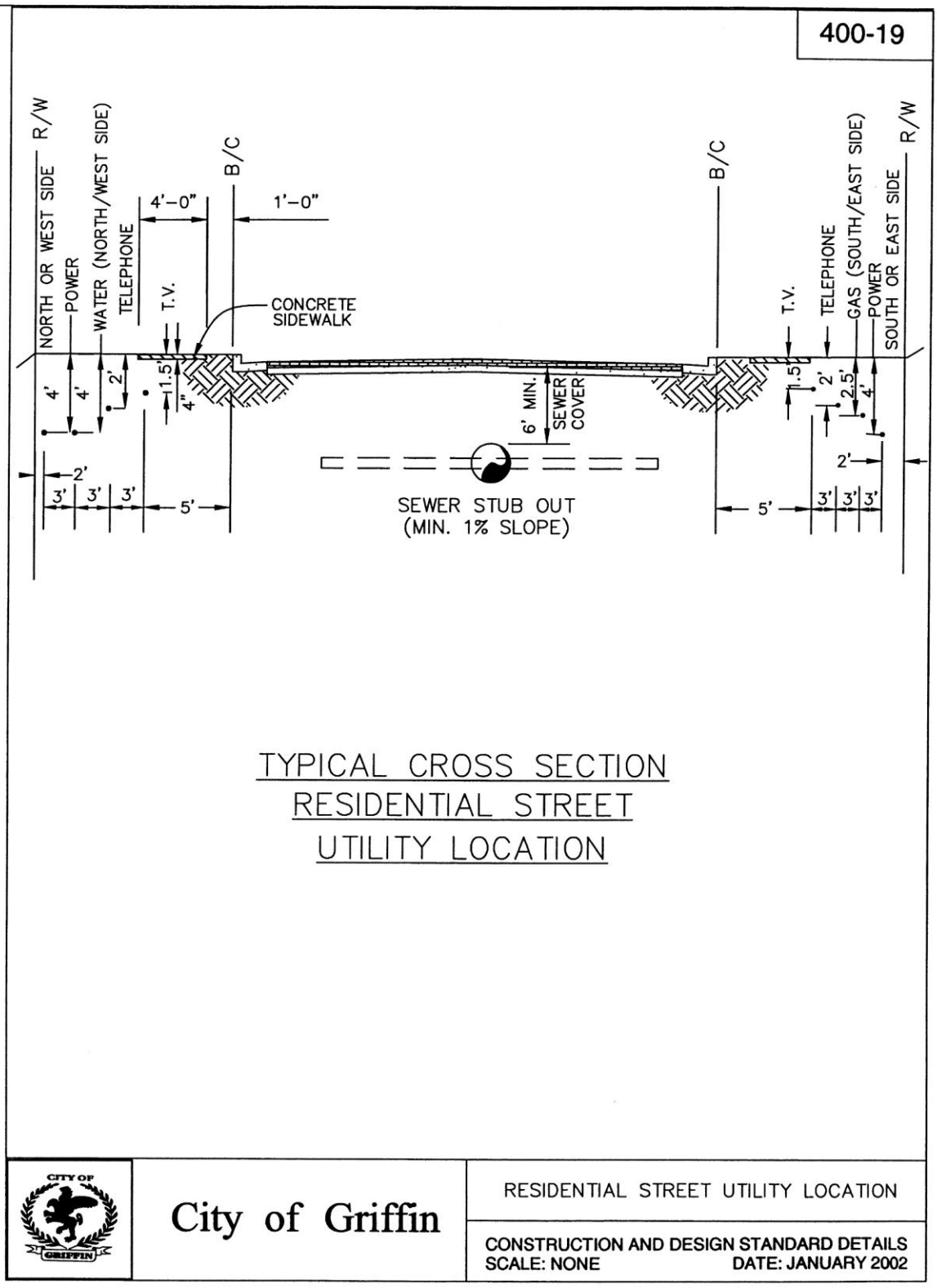

14. 20 RESIDENTIAL STREET UTILITY LOCATION

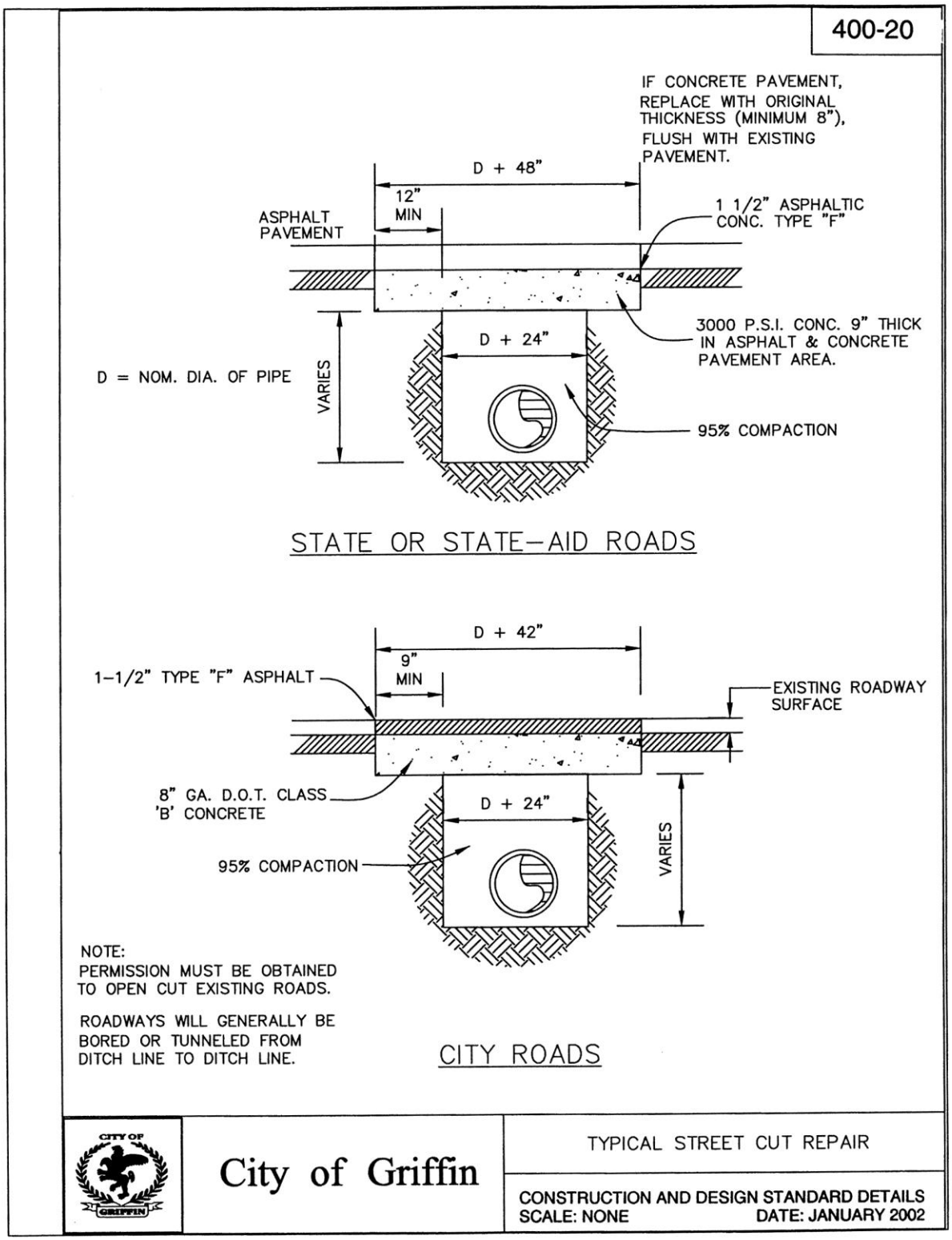

14. 21 TYPICAL STREET CUT REPAIR

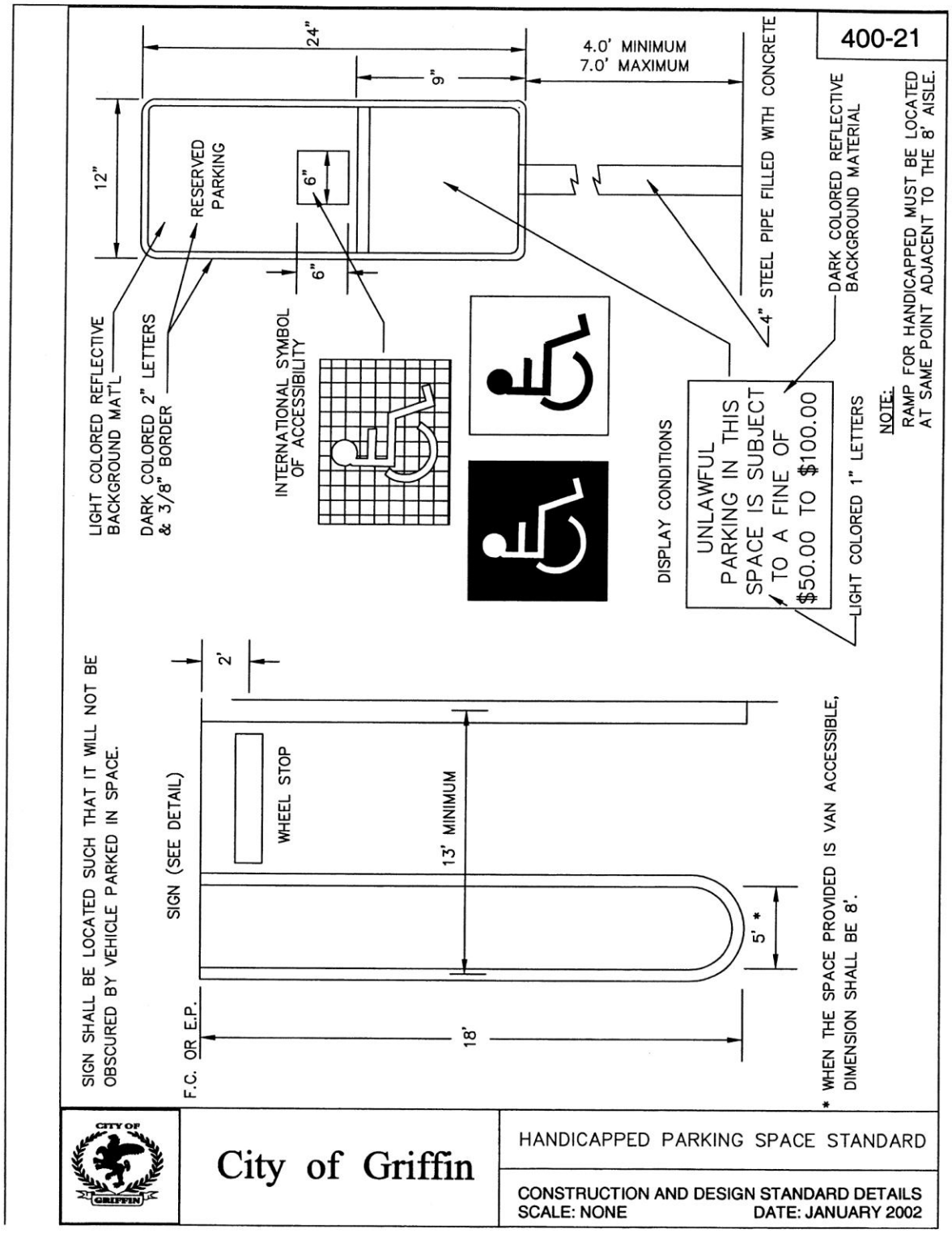

14. 11 HANDICAPPED PARKING SPACE STANDARD

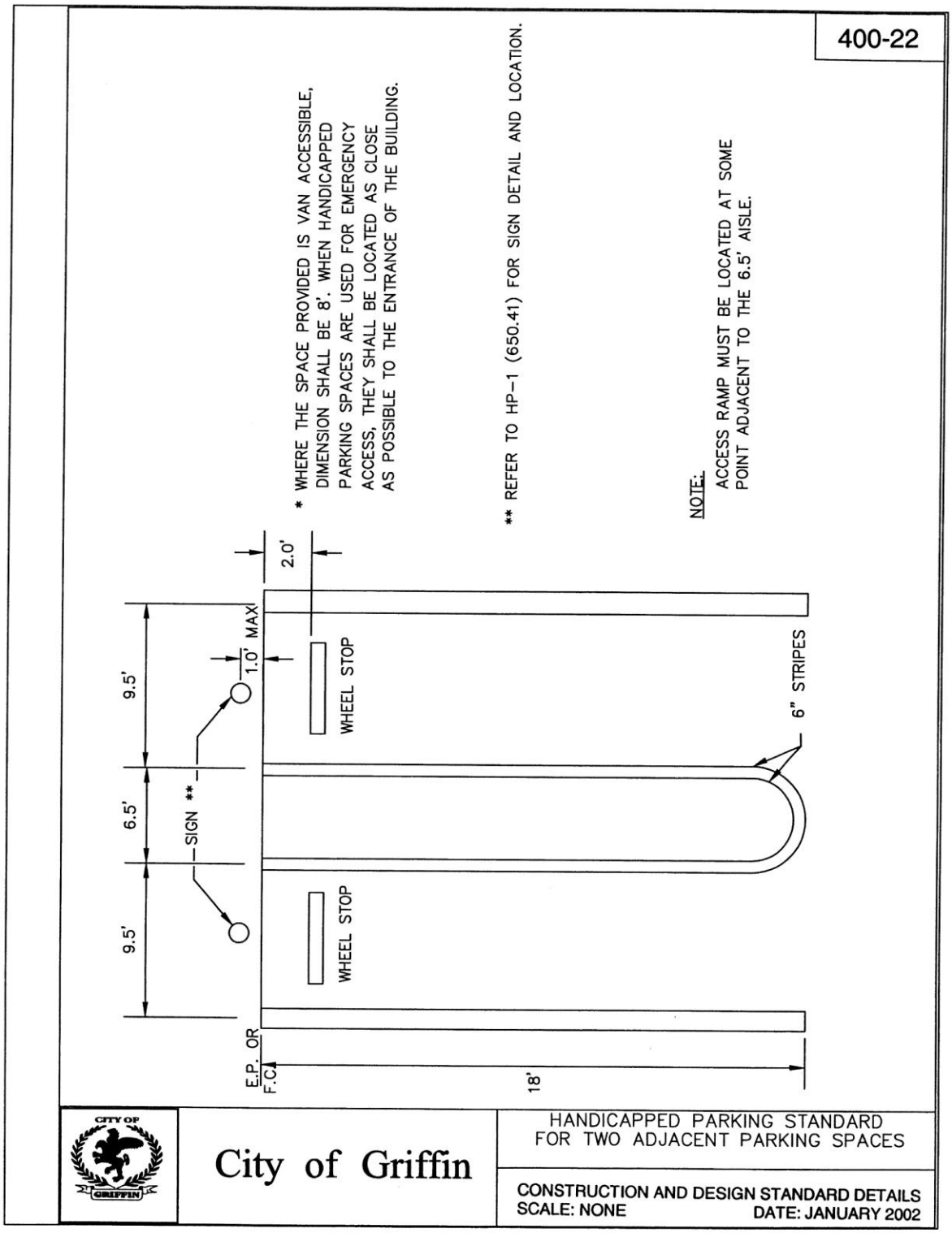

14. 12 HANDICAPPED PARKING STANDARD FOR TWO ADJACENT PARKING SPACES

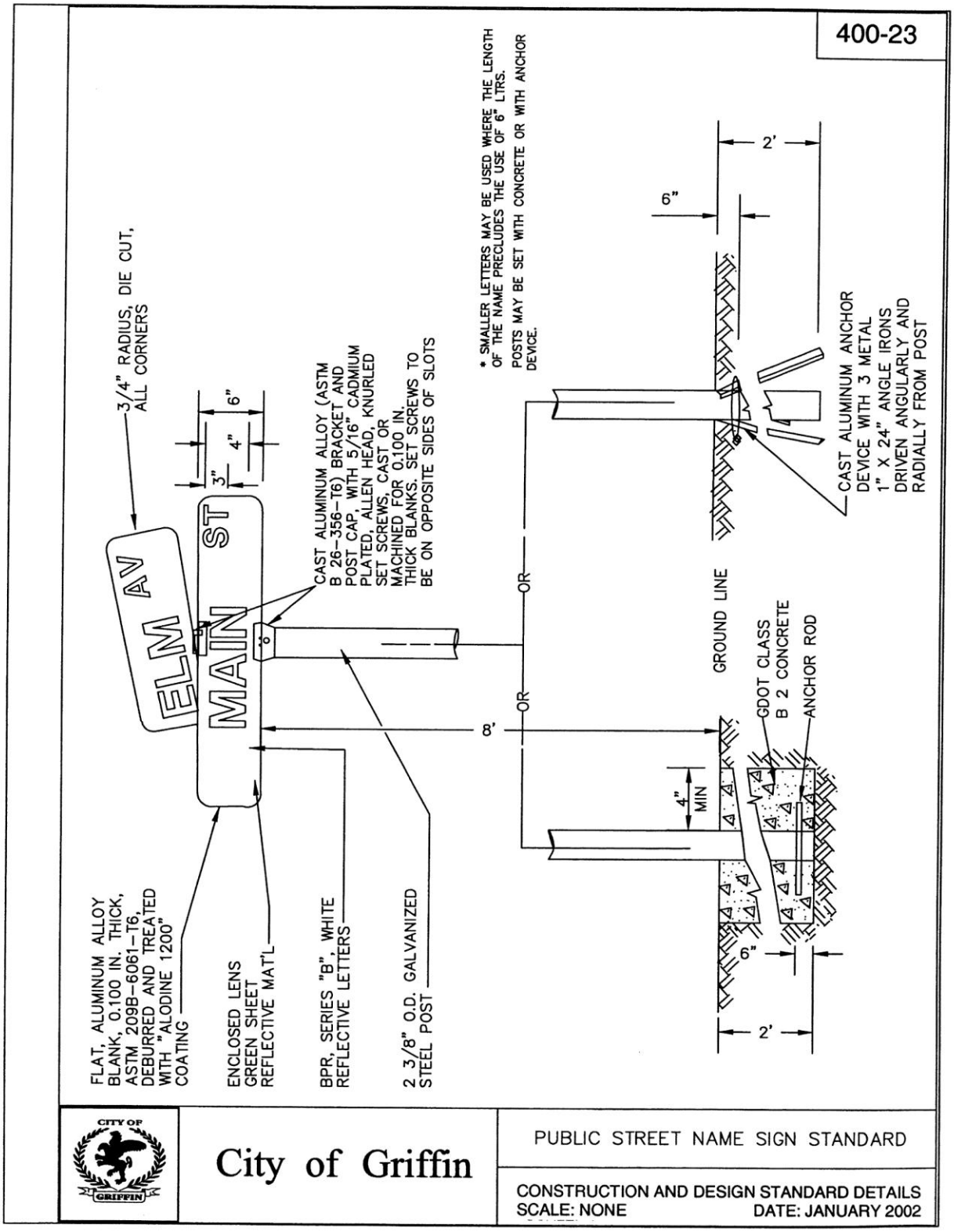

14. 134 PUBLIC STREET NAME SIGN STANDARD

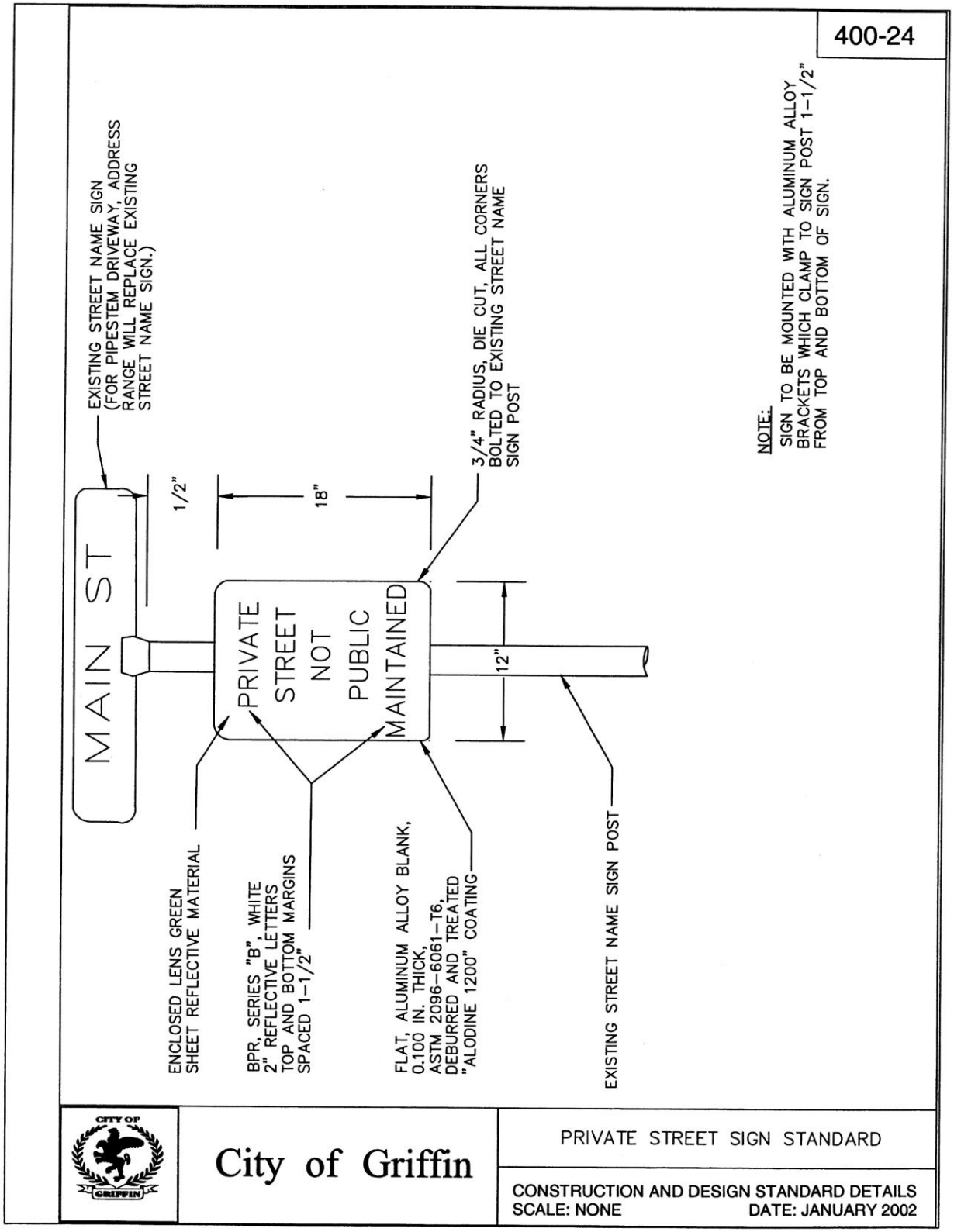

14. 25 PRIVATE STREET SIGN STANDARD

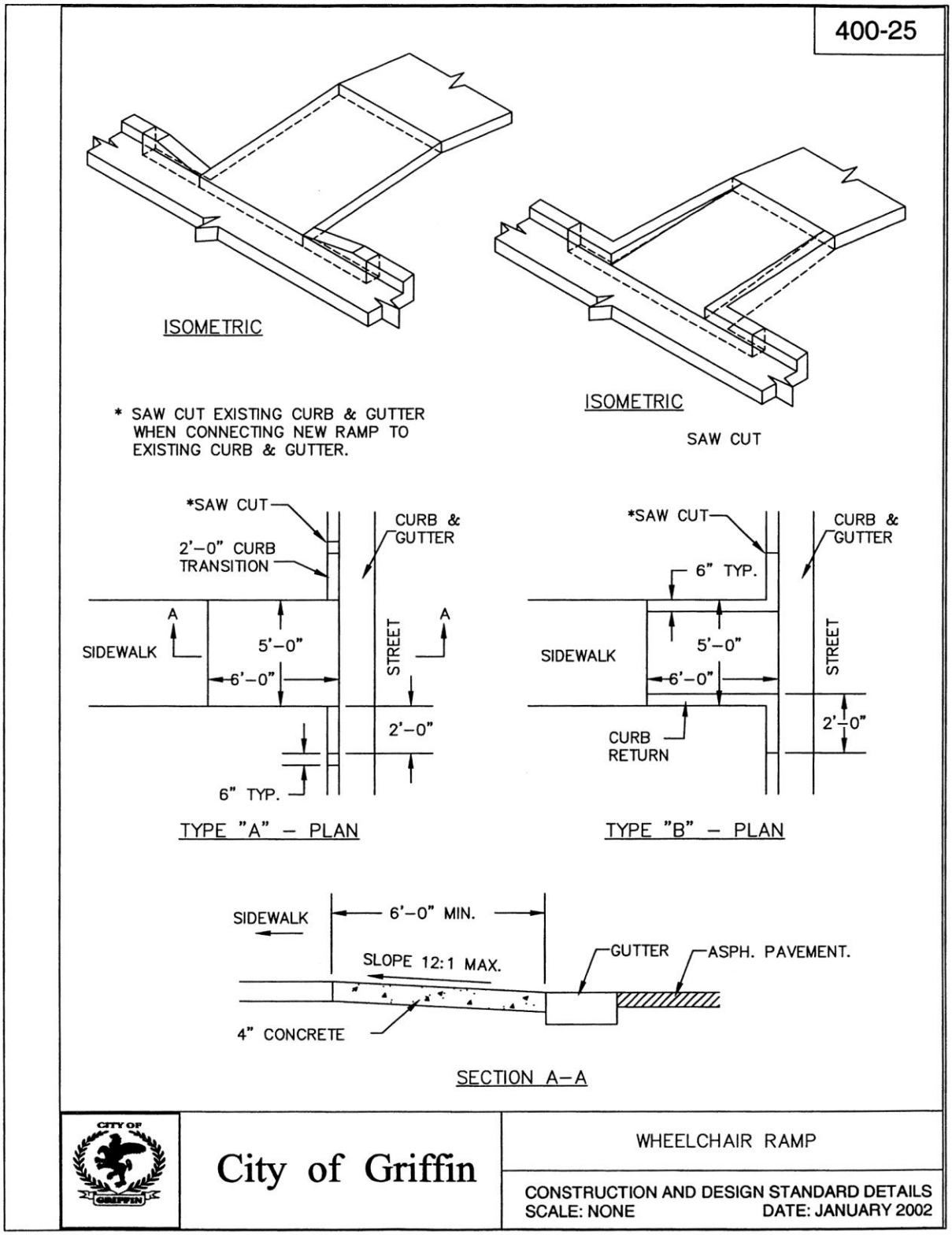

14. 26 WHEELCHAIR RAMP

Article 15. FIRE SAFETY SYSTEMS

1501. GENERAL POLICY AND REQUIREMENTS

1501 A. Fire lanes.

1. The city shall designate fire lands on public streets and private property used for townhouse, multi-family, commercial, institutional and industrial developments.
2. The purpose of the fire lanes shall be to prevent parking and standing adjacent to fire hydrants and also to provide clear access to buildings and fire protection equipment.

1501 B. Water supply systems.

Water supply systems shall be provided in accordance with this code.

1501 C. Fire protection lines.

All fire protection lines shall be privately owned and maintained.

1502. FIRE SAFETY SYSTEM - PLANNING AND DESIGN

1502 A. Fire lanes.

1. Fire lanes in residential, commercial, institutional and industrial developments shall be designated by the city and shall be a minimum of 18 feet in width. This dimension shall be measured perpendicularly from the painted curb or perimeter line.

2. A minimum of two signs shall designate fire lanes, one at each end of the lane. Additional signs shall be provided at minimum intervals of 200 feet. Fire lanes may be painted in parking areas where no curb and gutter exists and where posting of a metal sign is not feasible. See construction standards for fire lanes in this manual.

1502 B. Emergency access in general.

1. Emergency access shall have an all weather surface capable of supporting heavy equipment.

2. Emergency access driveways, excluding parking, shall be a minimum of 20 feet wide. The minimum turning radii shall be 32 feet.

3. Reasonable accessibility shall be provided to and around all buildings for firefighting equipment, including ladder trucks on multiple-story buildings. A minimum of 20 feet on all sides of buildings and a radius of 50 feet at all building corners shall be maintained.

4. Where the number of dwelling units in a project exceeds 100, there shall be two entrances to the project where road frontage is adequate for two entrances, as determined by the rules and regulations for the control and protection of state highway rights-of-way.

5. Accessibility for firefighting equipment shall be maintained throughout all stages of construction and occupancy.

1502 C. Emergency access to the front of buildings.

1. An unobstructed emergency space of at least nine feet in width shall be provided in front of the main entrance of buildings where vehicle parking is adjacent to the building and not separated by a fire lane.

2. A series of nine-foot wide unobstructed emergency spaces shall be provided in front of a strip shopping center where parking is adjacent to the building and not separated from it by a fire lane. The spaces shall be provided at 100-foot intervals along the front of the building.

1502 D. Emergency access to the rear and side of buildings

Each building with a rear dimension exceeding 100 feet in length shall have an access capable of handling emergency equipment if the building is not accessible from a street, driveway, service area, or parking area. The access used exclusively for emergency purposes shall be a minimum of 20 feet wide.

1502 E. Emergency access limits

1. Emergency access limits are defined as the maximum distance between a building and the closest point of emergency vehicle access. These limits shall be measured from the main building entrance to the edge of pavement, curb line or emergency access point. An emergency access point is defined as the closest point to the main entrance of a building that an emergency vehicle can reach on all-weather surface capable of supporting such a vehicle.
2. In townhouse developments, the maximum distance from the curb line (or the emergency access point) to the building entrance may not exceed 75 feet.
3. In multi-family developments, the maximum distance from the curb line (or the emergency access point) to the building entrance shall be 50 feet.
4. In buildings over three stories in height, the maximum distance from the curb (or the emergency access point) shall conform to the guidelines listed in table 15-1. For purposes of this section, the building height measured in feet is the distance between the lowest level of fire department access to the finish floor level of the topmost habitable floor.

Table 15. 1 Building height distance from the curb or Emergency Access point

Building Height (feet)	Distance (feet)
30 to 45	50
40 to 60	40
61 to 75	30
Greater than 75	20

1502 F. Fire main size

1. *Single family*. Single-family residential developments shall use a minimum of six-inch mains; larger size mains dependent on demand, fire flow requirements and the city's master water plan.
2. *Multi-family*. Multi-family residential developments shall use a minimum of eight-inch mains.
3. Commercial areas with less than 200,000 square feet shall use fire mains a minimum of eight inches in size.
4. Large shopping centers, strip-malls, etc. shall use fire mains a minimum of eight inches in size.
5. Motels, light industrial & schools shall use fire mains a minimum of eight inches in size.
6. Heavy industry, warehouses and office buildings greater than 200,000 square feet shall use fire mains a minimum of ten inches in size.
7. The city or its designated representative shall have the authority to waive the above minimum fire main sizes provided the following conditions have been met:
   - **a.** Note on plans: "I have designed the water service installation for this facility in accordance with all applicable city water specifications in regards to fire flows and these conditions have been met". This note is to be signed and stamped by the engineer providing the calculations.
   - **b.** Provide the city with the calculations stamped and certified as required in the procedures section of this manual.

1503. FIRE HYDRANTS

1503 A. All fire hydrants shall be designed and manufactured to comply with the latest specifications of the AWWA. They shall be designed for 150 pounds working pressure. The hydrants shall be of simple design, easy to operate, effectively and positively drained and protected from damage by freezing and convenient for repairing and replacing parts.

1503 B. Hydrants shall be equipped with one 4½-inch diameter pumper nozzle and two 2½-inch diameter hose connections. The hydrants shall have threads meeting the latest requirements of the State Fire Insurance Commission. Hydrants shall also have a safety

flange on the barrel and a safety coupling on the valve stem, to prevent damage to barrel and stem in case of traffic accident. Hydrants shall be either Mueller Company's Centurion Traffic Model, or M & H Style 129 Traffic Model.

1503 C. Fire hydrant locations.

1. The 4½-inch pumper connection on the hydrant shall face the street, travel lane or service drive.
2. The bottom of the 4½-inch nozzle shall be 24 inches above the elevation of the edge of the shoulder on streets without curb and gutter and 24 inches above the elevation of the curb on streets with curb and gutter.
3. The 2½-inch hose connections shall have a minimum of four feet of clearance on all sides.
4. No fire hydrant shall be obscured from view by plantings, fences, etc.

1503 D. Spacing.

Fire hydrants shall be spaced as follows:

1. *Single family*. Fire hydrants shall be spaced not more than 300 feet apart. Fire hydrants shall be located at all intersections and shall be located at the end of the line of all cul-de-sacs.
2. *Multi-family, condominiums and townhouses.* Fire hydrants shall be spaced at the fire department's discretion.
3. *Shopping centers, malls, etc*. Fire hydrants shall be spaced at the fire department's discretion.
4. *Motels, light industry and schools.* Fire hydrants shall be spaced at the fire department's discretion.
5. *Heavy industry/tall buildings.* Fire hydrants shall be spaced at the fire department's discretion.

1503 E. Fire hydrants in relation to streets and parking lots.

1. Fire hydrants shall be located along the right-of-way at street intersections and at intermediate locations where necessary, as determined by the city fire chief or his designee in cooperation with the director of the water and wastewater department. All distance measurements are to be made along with the centerline of streets, travelways or other unobstructed path that may be used by the fire department.
2. In areas with curb and gutter, the center of the fire hydrant shall be located no less than 18 inches nor more than 36 inches from the face of the curb. No part of a fire hydrant shall conflict with or overhand a sidewalk, trail or vehicular travelway.
3. On streets without curb and gutter, fire hydrants shall be located behind the ditch.
4. Traffic bollards or other protective measures shall be provided in areas, such as parking lots where the proposed site improvements will not provide adequate protection of the fire hydrant from vehicles.
5. When installed in parking areas, clear access shall be provided to the front of the hydrant (that portion with the large pumper connection at the center) and 15 feet to each side. This clear access area shall be marked as fire lane.
6. Plantings and other obstructions shall be kept clear of fire hydrants for a minimum of 4½ feet around the hydrant.

1503 F. Fire hydrants in relation to buildings.

1. Fire hydrants shall be located to serve remote areas of buildings. Those hydrants used to meet fire flow requirements shall be located within 500 feet of the building to be protected.
2. Fire hydrants shall be required along the perimeter of the building for use groups in accordance with Table 15.2. The remote distance shall be measured to the most remote distance the hydrant will serve.

Table 15. 2 Use group and Fire Hydrant remote distance

Use Group	Remote Distance (feet)
Heavy industrial & warehouse buildings	250
School and institutional buildings	300
Commercial, church and office buildings	300
Motels, multi-family, condominium and townhouse buildings	250
Single-family detached dwellings	400

3. Fire hydrants shall be a minimum of 50 feet away from all buildings, except single-family dwellings.

1503 G. Fire hydrants in relation to sprinklers/standpipes.

Fire hydrants shall be located within 100 feet of any fire department sprinkler connection or standpipes where those systems are required/provided in buildings.

1503 H. Sprinkler/standpipe fire department connections.

1. Fire department connections shall be located to be visible from a street. If a visible location from a street is not possible, the fire chief or his designee shall approve alternate locations. Such connections shall be located to provide immediate access to the fire department. Generally, walls, fences, trees, shrubs and other obstructions shall not be placed to prevent access.
2. Fire department connections shall be arranged to allow the use of any one water sprinkler connection to serve all the sprinklers within the building and to allow the use of any one standpipe connection to serve all the standpipes within the building.
3. Fire department connections shall not be less than 18 inches nor more than 42 inches in elevation measured from ground level to the centerline of the inlets.
4. In buildings classified as high-rise by the building code, the fire department connections shall be located a minimum of 50 feet from the building. The fire chief or his designee and the director of water and wastewater shall approve the location of this yard connection.

1504. FIRE FLOW REQUIREMENTS

1504 A. Flow requirements.

1. Water systems shall be designed to provide fire flows in accordance with table 15-3, plus the domestic demand required by the department of water and wastewater. A residual pressure of not less than 20 pounds per square inch (psi) to at least one point within 500 feet of each building proposed to be served shall be provided.

2. The fire flows in table 15-3 apply to new development. Where the size and the scope of the development exceed these requirements, additional flow shall be provided in accordance with Insurance Services Office (ISO) requirements.

3. Fire flow requirements may be met in single-family residential and two-family developments with a single hydrant within 500 feet of a structure in accordance with table 15-3.

4. In areas of multi-use development, the higher flow rates listed in table 15-3 shall be provided for each hydrant.

5. Other residential (i.e., multi-family, condominium, townhouse), commercial, institutional, and industrial developments shall provide a fire flow of 2500 gallons per minutes.

Table 15. 3 Fire flow requirements for single-family detached and two-family dwellings

Unit to Unit Exposure Distance (feet)	Flow Requirements per Hydrant (gpm)	Flow Requirements for a Hydrant within 500 feet of a Structure (gpm)
0 to 10	1,500	2,000
10 to 30	1,000	1,500
Greater than 30	1,000	1,000

1504 B. Fire flow calculations

1. Fire flow calculations shall include assumptions about the existing system. The calculations shall indicate available flows at the proposed hydrants and the pressure throughout the proposed system.
2. Fire flow calculations for projects to be developed in sections or phases shall indicate the available fire flows during each section or phase of the project.
3. For small sites that propose no major waterline extensions, an evaluation of the existing fire flow available may be substituted for existing fire flow calculations.
4. In the event that minimum fire flows cannot be achieved, the developer of a property shall design additional fire protection measures into every building not covered by adequate flows. Any deviation from the minimum fire flow requirements shall require a site development plan waiver application, for condition fire flow requirements. See site development plan requirements in this manual.
5. Flow calculations shall be prepared using a program that is acceptable to the city, such as the "K Pipe" program developed by the University of Kentucky.
6. Flow calculations shall utilize a pipe roughness factor, c=120 for pipes that are 12 inches in diameter and greater. For pipes smaller than 12 inches a roughness factor of c=100 shall be utilized. Since a conservation "c" factor is utilized in the calculations, no allowance is required for the losses in valves and other fittings.
7. The line velocity shall not exceed ten feet per second under any flow condition. Consideration shall be given to the line size used in areas where a domestic service line extends from a dead end line. In this instance, the line velocity may be permitted to exceed ten feet per second to avoid stale water problems.

1504 C. Water storage systems.

Water storage systems utilized to maintain fire flow shall have capacity to sustain the required flow for a minimum of four hours in duration.

1505. FIRE SAFETY SYSTEMS- PLAN SUBMISSION REQUIREMENTS

1505 A. Plan elements in general.

The site development and subdivision plans shall include the following:

1. Fire lanes.
2. Emergency access.
3. Existing and proposed fire hydrants.
4. Fire protection lines.
5. Water storage supplies, where applicable.

1505 B. Fire flow calculations.

1. Fire flow calculations shall be included with the site and subdivision development plans.
2. Deviations from the minimum fire flow requirements in section 504.2 of this manual shall require a conditional fire flow waiver with the site and subdivision development plan application. The waiver shall address current fire flow available and provide a system analysis to determine measures for bringing deficiencies up to minimum standards.
3. The department of water and wastewater, after coordinating with the fire chief and fire marshal, shall approve additional fire protection measures proposed for every building not

covered by adequate fire flows, prior to the approval of the site and subdivision development plans.

1506. FIRE LINE ORDINANCE

1506 A. Purpose.

The purpose of this ordinance is to require the installation of an underwriter approved detector meter or a factory mutual fire meter on all unmetered fire service systems having fire hydrant(s), hand hose connection(s), or sprinkler head(s) on private property.

1506 B. Effective date.

1. Upon adoption of this ordinance, all persons making applications for new fire service connections with private fire hydrant(s), hand hose connection(s), or sprinkler head(s) attached thereto shall be required to have an underwriter approved detector meter or factory mutual fire line meter. However, if consumption of unmetered water from fire service systems is discovered, the two-year grace period will be forfeited and immediate installation of an approved detector meter or factor mutual fire line meter will be required.
2. Within two years after adoption of this ordinance, all existing unmetered fire service systems with private fire hydrant(s), hand hose connection(s), or sprinkler head(s) attached thereto shall be required to have an underwriter approved detector meter or factory mutual fire line meter. However, if consumption of unmetered water from fire service systems is discovered, the two-year grace period will be forfeited and immediate installation of an approved detector meter or factory mutual fire line meter will be required.
3. When unauthorized water is used through a detector meter in three or more billing periods in one calendar year, it shall be replaced with a factory mutual fire line meter. Unauthorized use of water is defined as non-fire fighting water and/or water use without prior notification and approval of the city.
4. All domestic water supply must be metered with a proper meter.
5. Work to be performed by developer. Installation of detector meters or factory mutual billing periods in one calendar year it shall be handled by the developer under supervision of the city's inspectors. The cost of installation will be at a rate established for each individual site.
6. The city shall have the authority to cut off water service to buildings whose owners refuse to comply with the provisions of this ordinance upon proper notification of 60 days.
7. The regular monthly fire service standby charge shall be continued for fire service installation having a detector or mutual fire line meter. The water that is measured by the detector meter will be billed at five times normal water charge. If the services of legal counsel are required to collect bills, the cost of counsel shall be added to the billing.

1506 C. Other items.

1507. FIRE SAFETY SYSTEMS - CONSTRUCTION STANDARDS

1507 A. Fire lane signs and painting.

1. Fire lane signs shall be constructed of metal with a dimension of approximately 12 inches by 15 inches.
2. The sign shall be painted with red letters on a white background with a three-eighths inch red trim strip around the entire outer edge of the sign. The lettering on the sign shall read, "NO PARKING OR STANDING FIRE LANE", which shall be spaced on the sign face uniformly. Solid arrows shall be painted on the signs to point to and indicate the designated fire lane. The lettering and arrow on the sign shall be in accordance with table 15-4.
3. Signs for fire lanes shall be posted at intervals of 100 feet with the bottom of the sign no less than six feet from the ground, and the top no more than eight feet from the ground, unless otherwise directed by the fire chief or his designee.
4. Letters at least two feet in height may be painted on the pavement where a fire lane runs through a parking area without curbing adjacent to the fire lane, and where the posting of a metal sign(s) is impractical. The lettering shall read "NO PARKING OR STANDING FIRE LANE."

Table 15. 4 Fire lane sign lettering

Lettering (words)	Letter Height (inches)
NO PARKING	2
OR	1
STANDING	2
FIRE LANE	2½
Arrows	1

5. When curbing is provided adjacent to the fire lane, it shall be painted yellow within the limits of the fire lane.
6. When curbing is not provided adjacent to the fire lane, a yellow line shall be painted on the pavement along the perimeter and within the limits of the fire lane with two (2)-foot long intersecting lines and painted at three (3)-foot intervals on the fire lane side of the perimeter.

1507 B. Fire hydrants.

1. All fire hydrants shall be designed and manufactured to comply with the latest specifications of the AWWA. They shall be designed for 150 pounds working pressure. The hydrants shall be of simple design, easy to operate, effectively and positively drained and protected from damage by freezing and convenient for repairing and replacing parts.
2. Hydrants shall be equipped with one 4½-inch diameter pumper nozzle and two 2½-inch diameter hose connections. The hydrants shall have threads meeting the latest requirements of the State Fire Insurance Commission. Hydrants shall also have a safety flange on the barrel and a safety coupling on the valve stem, to prevent damage to barrel and stem in case of traffic accident. Hydrants shall be either Mueller Company's Centurion Traffic Model, or M & H Style 129 Traffic Model.
3. The construction to the main line shall be with mechanical joint locked hydrant tee equal to American Cast Iron Pipe Company A-10180. Wherever possible the fire hydrant shall be connected to the gate valve by using a locked hydrant adapter equal to American A-10895. The connection at the base of the hydrant shall be mechanical joint with ductile iron retainer gland, for Class 150, centrifugally case, six-inch ductile iron pipe. The valve opening shall meet the requirements of the AWWA Specifications for 5¼-inch hydrants. The valve, valve seat and inner working parts shall be easily accessible. The distance from the ground to the hose nozzle shall not be less than 24 inches. Each hydrant shall be neatly painted with a red reflecting paint.
4. Each hydrant shall be tested to 200 psi. The first test shall be made with the valve closed. The second test shall be made with the main valve open but all nozzles closed. While this test is being carried on, the hydrant shall be subjected to a hammer test. Any hydrant showing defects by leakage, sweating or otherwise shall be rejected. The barrel and all parts shall withstand these tests. These tests shall be made in the field after the hydrants are installed.

1507 C. Setting fire hydrants.

1. Fire hydrants shall be placed at the locations shown on the plans or as directed by the design professional. Gate valves for fire hydrants shall be connected directly to the main by means of a locked hydrant tee. All other connections between the main and the fire hydrant shall be mechanical joint with ductile iron retainer glands with setscrews. Fittings shall be restrained by a locked hydrant adapter whenever the fire hydrant is located close enough to the main to allow their use. Care shall be exercised that setscrews and retainer glands are tightened sufficiently to secure the hydrants before pressure is put on the main. Not less than four cubic feet of coarse, broken stone shall be placed around the base of the hydrants, as shown in the standard detail drawings. Before placing the hydrants, care shall be taken to see that all foreign material is removed from within the body. The stuffing boxes shall be tightened and the hydrant valve opened and closed to see that all parts are in first class working condition. All hydrant openings shall be kept capped, except when hydrant is being worked on.
2. When a fire hydrant has been constructed but is not yet placed in service, the contractor shall provide and attach to the fire hydrant, flags or collars indicating that the fire hydrant is not in service. Said flags or collars shall remain on the fire hydrant until it is put into service.

3. Whenever an existing fire hydrant is taken out of service, whether temporarily or permanently, it shall be equipped with a flag or collar indicating that it is not in service. The contractor shall provide and install flags or collars as required and shall notify the city fire department whenever the operating status of any fire hydrant changes.
4. Fire hydrants shall not be operated with any tool except a specifically designed fire hydrant wrench. If the contractor observes any other contractor or person operating a fire hydrant with an unapproved fire hydrant wrench, he shall report that fact to the city fire department or water and wastewater department immediately. It is the contractor's responsibility to insure that all new facilities are maintained in new condition until final completion of the project and acceptance by the city. Fire hydrants with damaged operating nuts shall not be accepted.

1507 D. Fire detection check valves.

1. Approved detection check valves shall be required on all fire service mains in buildings served by a "wet pipe" type sprinkler system.
2. The detection check valve shall be equipped with a bypass meter assembly. An appropriately sized gate valve shall be installed on either side of the check valve.
3. The vault housing the detector check valve should be sized in accordance with the standard details drawings in this manual.

1507 E. Sprinkler standpipe connections.

All fire department connections shall be fitted with National Standard threads.

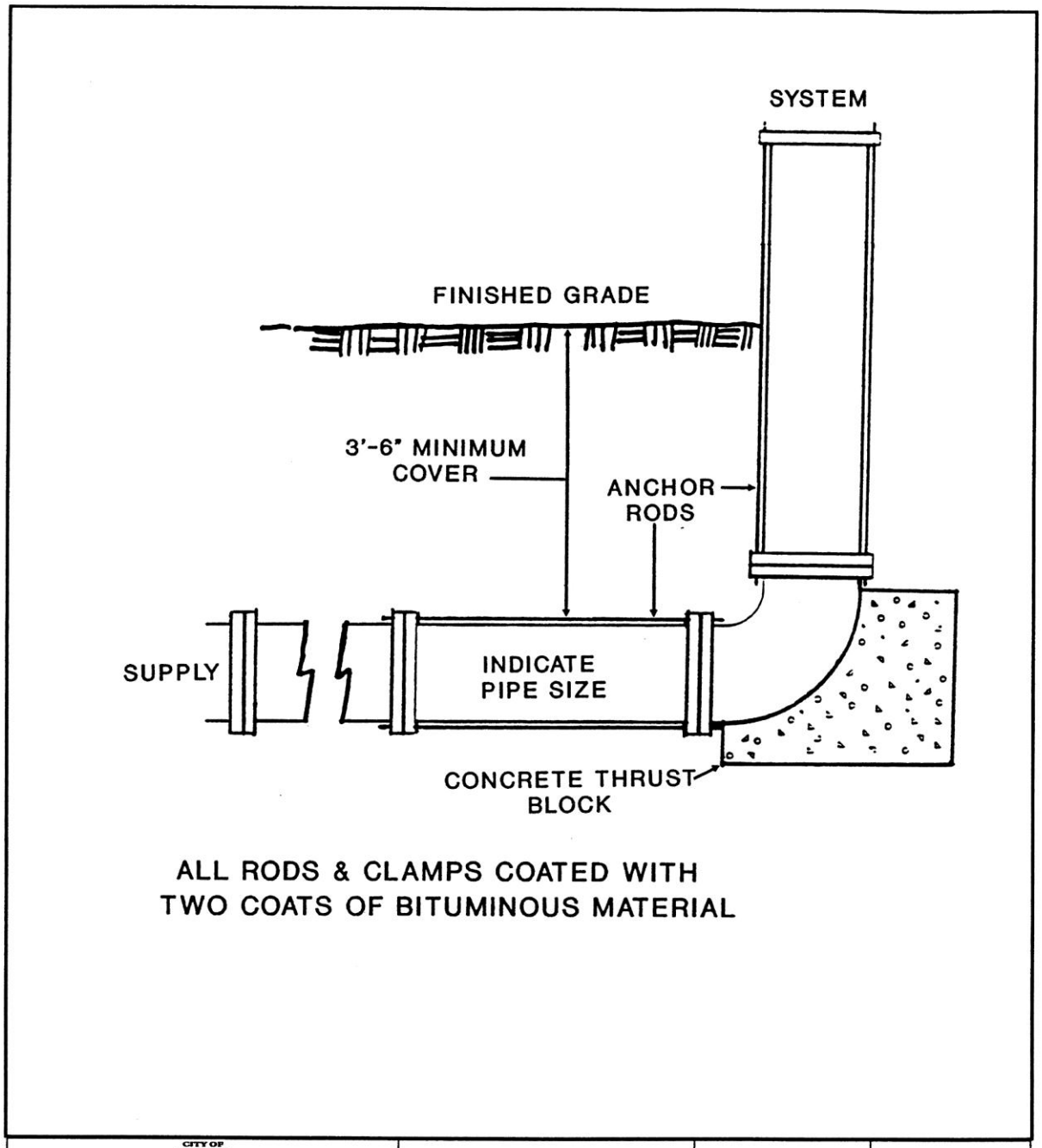

CITY OF GRIFFIN WATER & WASTEWATER DEPARTMENT	FIRE LINE DETAIL CONSTRUCTION STANDARD	DATE 12/96 APPROVED 1/8/02 EFFECTIVE 2/2002	STANDARD NO. 500-7

15. 1 FIRE LINE DETAIL

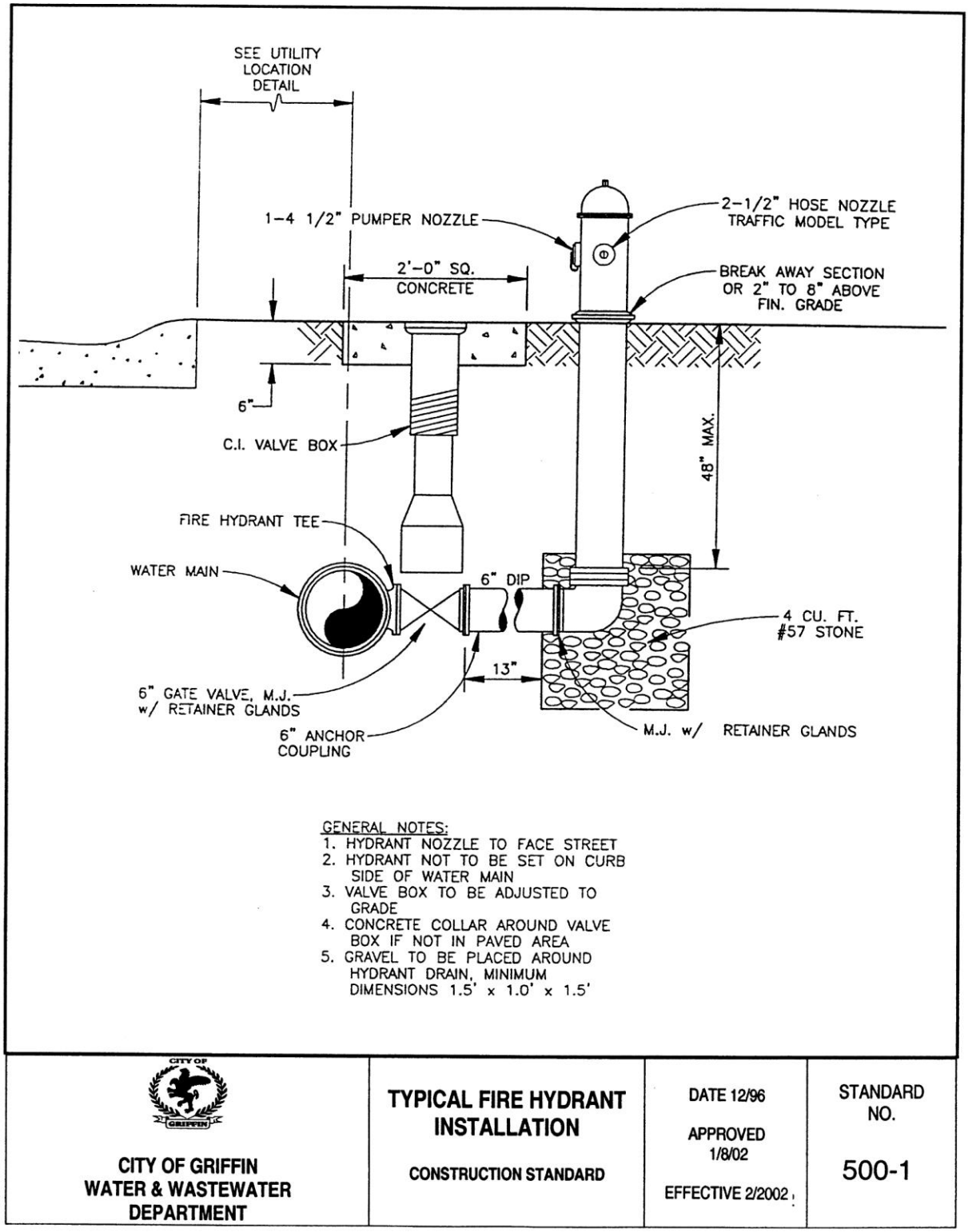

15. 2 TYPICAL FIRE HYDRANT INSTALLATION

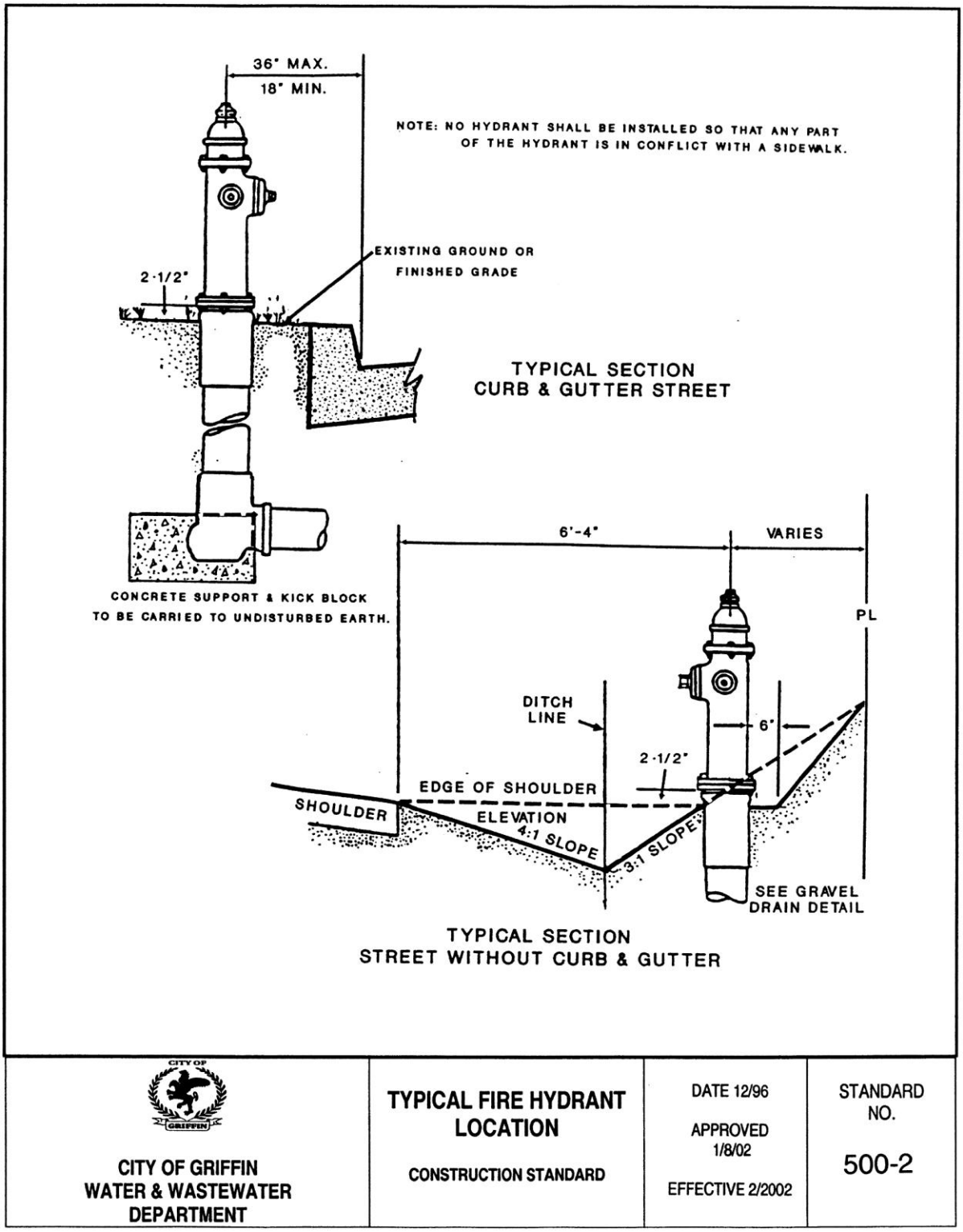

15. 3 TYPICAL FIRE HYDRANT LOCATION

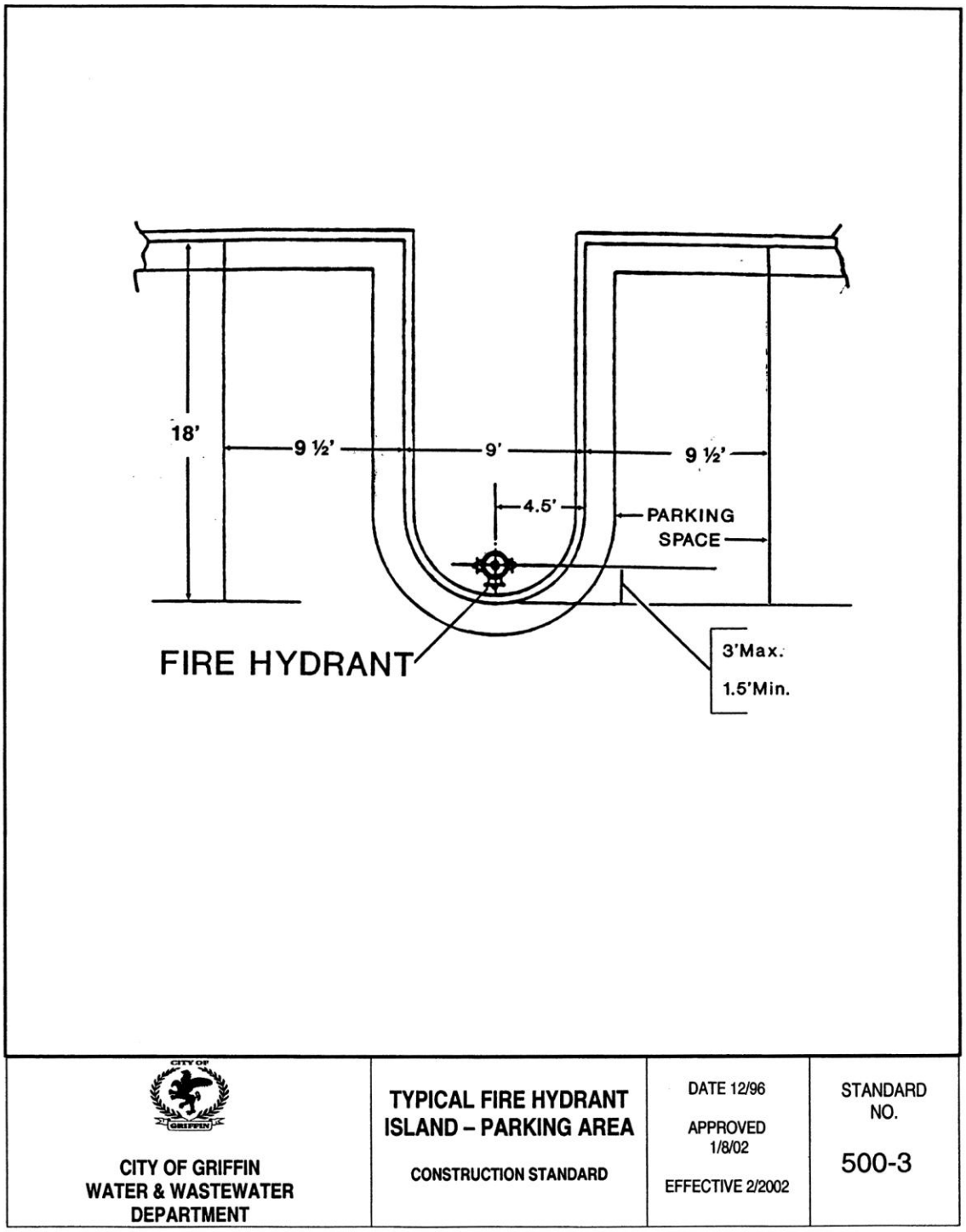

15. 4 TYPICAL FIRE HYDRANT ISLAND- PARKING AREA

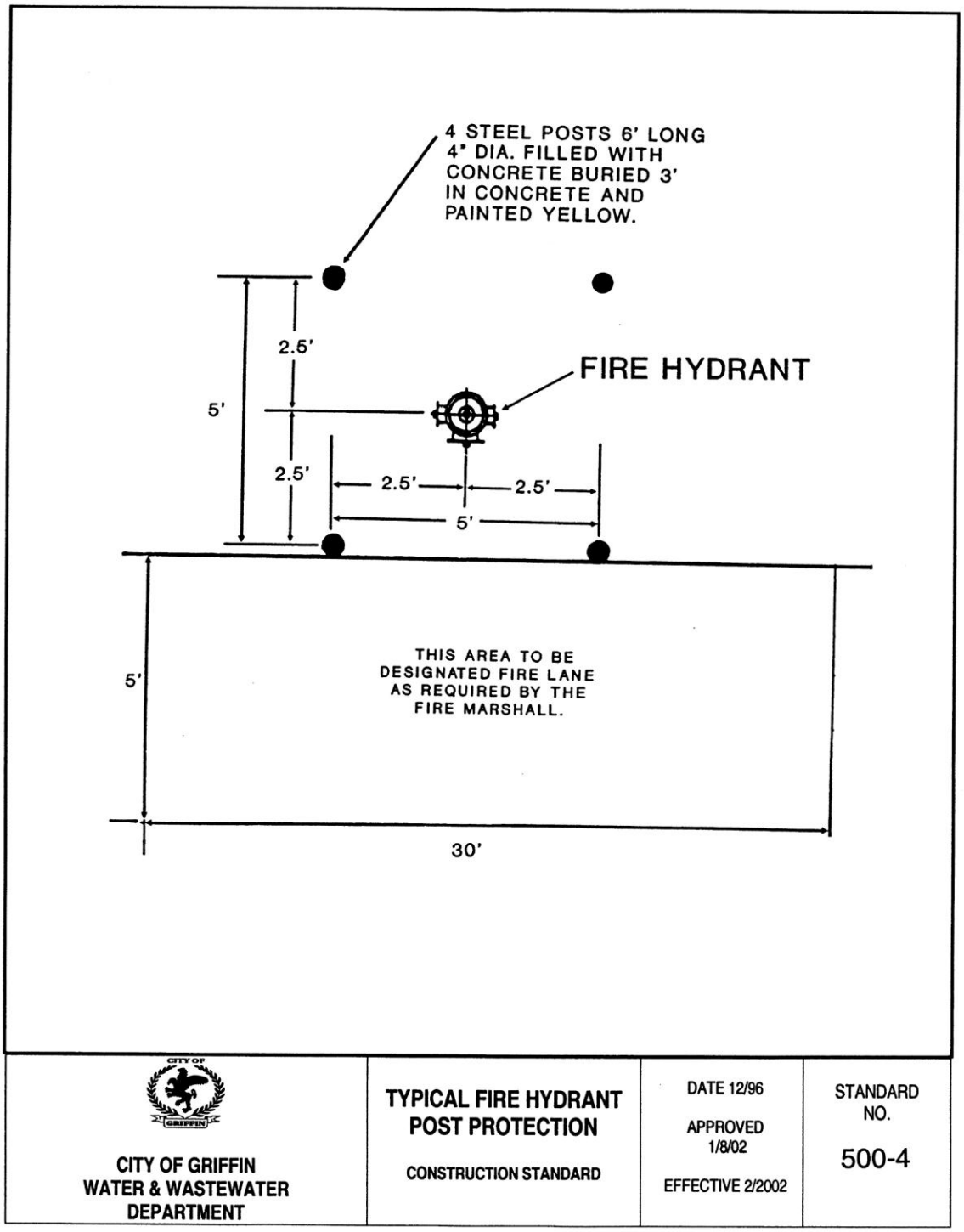

15. 5 TYPICAL FIRE HYDRANT POST PROTECTION

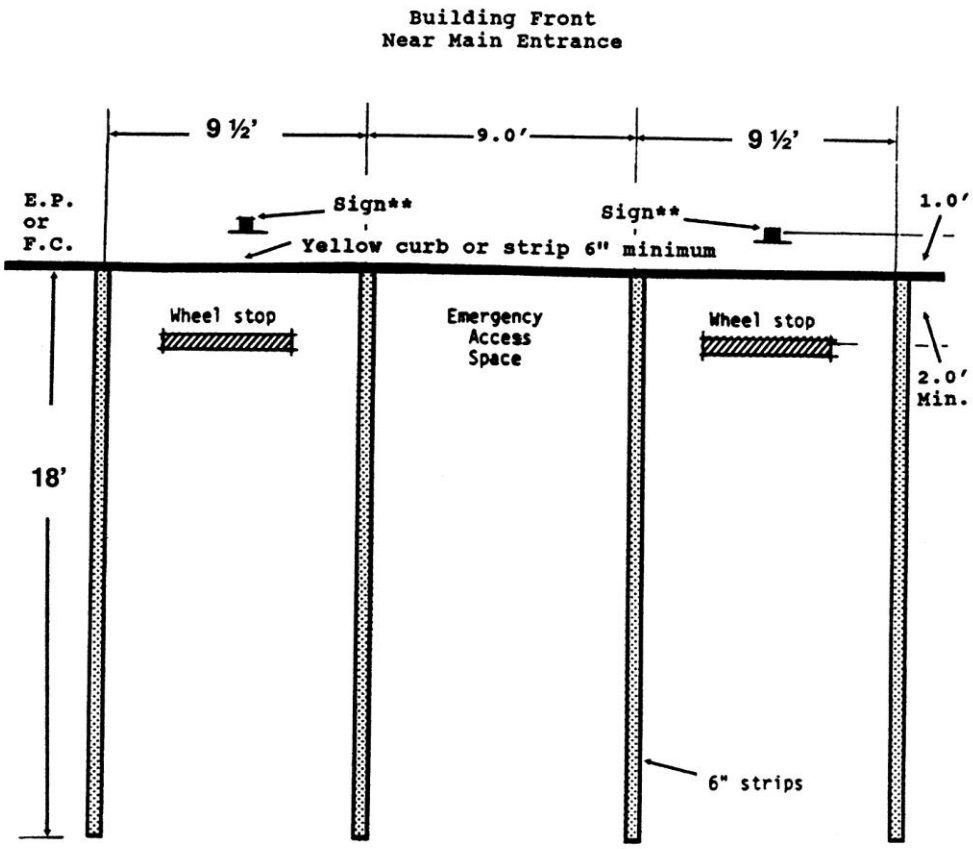

**Refer to HP-1 (650.10) for sign detail and location

Note: Access ramp must be located at some point adjacent to the 9.0' Emergency Access Space

CITY OF GRIFFIN WATER & WASTEWATER DEPARTMENT	Emergency Access Space Consolidated with 2 adjacent parking spaces reserved for the handicapped	DATE 12/96 APPROVED 1/8/02 EFFECTIVE 2/2002	STANDARD NO. 500-5

15. 6 EMERGENCY ACCESS SPACE CONSOLIDATED WITH 2 ADJACENT PARKING SPACES RESERVED FOR THE HANDICAPPED

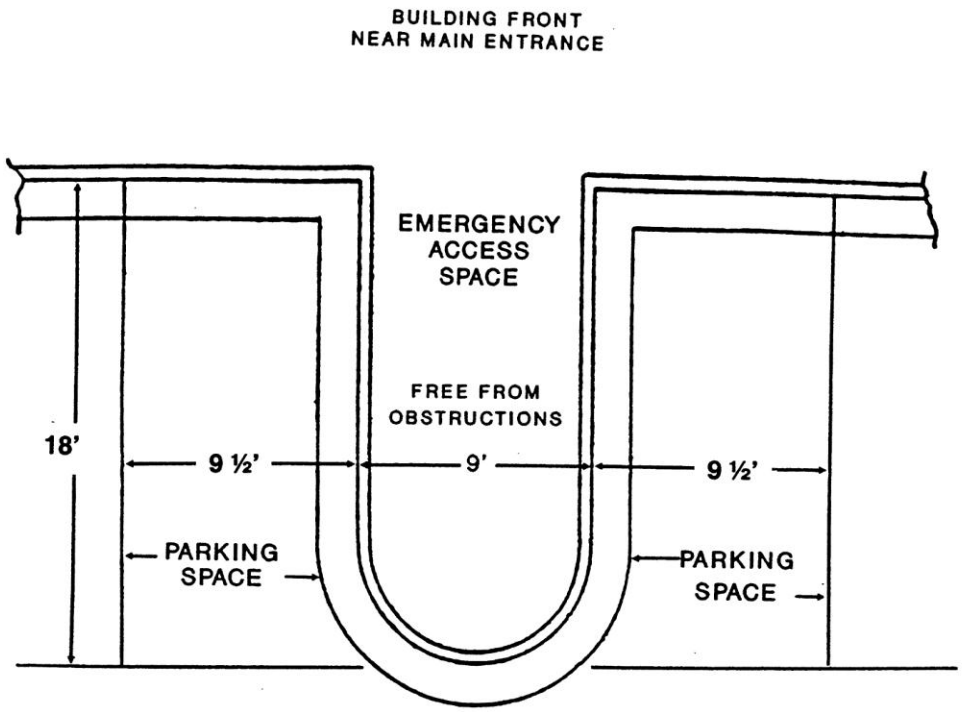

CITY OF GRIFFIN WATER & WASTEWATER DEPARTMENT	TYPICAL EMERGENCY ACCESS SPACE CONSTRUCTION STANDARD	DATE 12/96 APPROVED 1/8/02 EFFECTIVE 2/2002	STANDARD NO. 500-6

15. 7 TYPICAL EMERGENCY ACCESS SPACE

Article 16. WATER SUPPLY SYSTEMS

1601. PURPOSE

1601 A. The purpose of this section is to address the minimum requirements for design and construction of public water systems.

1601 B. The authority for discretionary provisions for design and construction of water systems shall vest with the director of the City of Griffin Water and Wastewater Department.

1601 C. This chapter is subject to periodic revision to meet changing requirements for materials, environmental regulations, etc. At the beginning of a project the user should verify that he has the latest edition.

1601 D. This document is intended to convey the general design and construction requirements for a typical project. It also lists specific requirements relating to inspection, testing and acceptance of facilities. It is not intended as a substitute for site-specific engineering and construction techniques. Individual project conditions may require waivers from the provisions in this document.

1602. GENERAL POLICY AND REQUIREMENTS

1602 A. Water systems shall be designed in accordance with the densities and intensities reflected in the long range future land use plan and map of the adopted City of Griffin Comprehensive Plan.

1602 B. The approximate location and character of proposed public water facilities shall correspond with the existing and proposed water system map, as amended.

1602 C. Water systems shall be designed for the estimated future population from all contributing points under consideration. The estimated future population shall be based on the adopted comprehensive plan and/or the existing zoning of the land to be served, whichever is greater.

1602 D. Except as provided below, all future buildings within the city's corporate limits that are to be utilized for human occupancy or any other use such as commercial or industrial purposes that requires water facilities shall be connected to the public water system.

1602 E. Water connections. All water service connections from the meter to the building, except when within a dedicated easement, are regulated by the Standard Plumbing Code (SBCCI) and shall be privately maintained.

1602 F. Water supply interconnections. There shall be no physical connections between a drinking water supply and a sanitary or storm sewer, or appurtenance thereof. All facilities furnished with a public drinking water supply will have no physical connection with private wells or other private water supply systems, or any other source of contamination.

1603. FIRE SAFETY SYSTEMS

Fire safety systems shall be designed and constructed in accordance with Article 16 of this manual.

1604. PLANS AND SUBMITTALS

1604 A. *General.* All projects which involve construction of lateral water lines, main water lines, or trunk lines shall have detailed construction plans and specifications prepared by a registered professional engineer licensed in the State of Georgia or a design

professional who meets state licensure requirements applicable to the profession or practice he is engaged in. Developments that only involve building water lines may have plans and specifications prepared by the project architect.

1. Water flow test. A water flow test shall be performed on the existing water line to determine the adequacy of the existing water supply line for the project. The test shall consist of a fire hydrant flow test and a 24-hour pressure test. The city will perform the tests at the developer's expense.
2. Test information shall consist of:
   a. Static pressure and flow in gallons per minute (gpm).
   b. Residual pressure and flow in gpm.
   c. Available flow at highest point in the development in gpm with residual pressure of 20 psi.
   d. Twenty-four hour pressure chart.
3. An adequate supply of water for the proposed project shall be available prior to final approval of the plans. Flow tests shall be valid for one year.
4. All projects that have flow test results with static pressure less than 36 psi will require a special design study to be accomplished and submitted to the city for approval to insure no problems are encountered during peak demands.

1604 B. All site development plans involving water systems shall be submitted to the department of development services. The department of development services shall coordinate the review and approval of all elements of the plan in accordance with chapter 300 of this manual.

1604 C. Preliminary plan review.

Preliminary plans will be prepared and submitted for review as described in chapter 300 of these development regulations. Questions relating to availability of sanitary sewers and proposed location of connection should be resolved at this stage before proceeding with final planning. A submittal for preliminary plan review must include all land to be developed even though the land is to be developed in several phases or units. Availability determinations will be made for the total project.

1604 D. Final plan review.

All final plans for public sanitary sewer facilities shall be prepared in accordance with the requirements described in chapter 300 and as requested in regulations promulgated by the Georgia Environmental Protection Division (EPD). The developer shall be responsible for submitting all necessary plans and other data to EPD for required approvals and for obtaining other permits, such as DOT, railroad, etc.

1604 E. Plan elements.

In addition to the information to be provided in chapter 300, the following information shall be provided on all site development plans:

1. All proposed water lines and the location and size of all valves, fittings, air relief valves, meters, discharge lines, blow-off chambers and other appurtenances.
2. On industrial and commercial developments the water meter and service line size and location.

1605. AS-BUILT DRAWINGS

All as-built or record drawings must be submitted in a digital computer file format, as well as with paper copies, with specifications as follows and submitted to the City of Griffin public works/stormwater department for acceptance.

Acceptable formats for digital as-builts include:

AutoCAD .dwg or .dxf files
ESRI GIS "shape" files
ESRI GIS "geodatabase" files

As-built data must be in the City of Griffin's coordinate system, which is the West Georgia State Plane Coordinate System (NAD83), and the vertical datum must be NAVD88.

The City of Griffin has a survey monument system for reference in the above coordinate system available for contractors to tie in to. Any information regarding the City of Griffin's monuments can be accessed by visiting www.griffinstorm.com and accessing the appropriate link for the control point network.

As-builts must include all data regarding the project including but not limited to water, sewer, stormwater and parcel data. This data needs to be submitted on separate layers and/or files under the aforementioned names. Detention ponds, pipe sizes, types, elevations, and inverts must be shown including impervious areas.

If you have any computer file format questions please feel free to call the City of Griffin GIS department at 770-412-9950 Ext. 2.

GUIDELINES FOR PREPARATION OF AS-BUILTS:

1. As-built drawings will be same format as the original construction plans.
2. Road names and lot numbers should be on plans.
3. "As-Builts" or "Record Drawing" is to be stamped in large clear print on plans.
4. Sheet should be no larger than 24" X 36".
5. Mains including size and type of meter should be shown.
6. Service and meter locations should be shown.
7. Fire hydrants, gate valves, air release valves should be shown.
8. Plan of fire meters or detector meters should be shown if applicable.

1606. EASEMENTS

1606 A. All easements shall allow adequate room to construct the water line and appurtenances. Permanent easements shall be a minimum of 20 feet wide; except that when the depth of the water line exceeds ten feet the required easement width shall increase such that the easement width is at least twice the depth from the ground surface to bottom of the pipe. Easements with dual utilities are to be a minimum of 35 feet in width.

1606 B. To provide for maximum utilization of public water systems, appropriate easements shall be provided to adjacent properties for access to, or extension of, said utilities. Such easements shall be dedicated to the City of Griffin.

1606 C. It shall be the responsibility of the developer to obtain any off-site easements required to connect the project to existing public water system. Easements will be conveyed to the City of Griffin for all facilities that are to be conveyed to the city. Final plans cannot be approved until all necessary off-site easements have been submitted, approved and recorded.

1607. WATER SYSTEM DESIGN CRITERIA

1607 A. General.

The criteria listed herein is not intended to cover all aspects of design, but rather to mention the basic guidelines and those particulars that are required by the City of Griffin.

1607 B. Water lines in public right-of-way.

1. Water lines will be allowed within the right-of-way of any roadway unless as determined by the city or GDOT there are compelling design or safety issues which would demand consideration of an alternate location.
2. Water lines will be allowed under pavement five feet from the outside edge of pavement or seven feet from the face of curb of undivided roadways unless there are compelling design and safety issues which would demand consideration of an alternate location.
3. Water lines greater than 24 inches in diameter, while permitted in most instances to cross any roadway, except a "limited access" right-of-way, shall not be permitted under the pavement parallel with the roadway alignment due to the necessity for structures, vaults, etc.
4. GDOT should be contacted at the preliminary plan stage to determine the acceptability of locating water lines under the pavement and/or within the right-of-way of state roadways, especially if, from preliminary review, it appears their guidelines will be difficult or impossible to meet.

1607 C. Surface water crossings.

1. Water lines crossing surface waters, both above and below the watercourse, present special problems and should be discussed with the department of water and wastewater before plans are prepared for submission.
2. Crossing of surface waters above the watercourse shall only be made when other methods are impractical.
3. When crossings are permitted, they shall be as close to a right angle to the stream as possible. No more area shall be disturbed than is necessary to provide for the construction of the water line at that location.

1607 D. Design calculations.

1. Residential water supply for domestic use shall be in accordance with table 16-1 and at a minimum residual pressure of 20 psi.

Table 16. 1 Instantaneous water demands for residential areas

Total Number of Residences Served	GPM Per Residence
5	8.0
10	5.0
20	4.3
30	3.8
40	3.4
50	3.0
60	2.7
70	2.5
80	2.2
90	2.1
100	2.0
150	1.6
200	1.3
300	1.2
400	0.9
500	0.8
750	0.7
1,000	0.6

2. The city may require the following minimum flow/duration quantities prior to development of the property.

a. Multi-family – 750 GPM for 30 minutes.

b. Shopping centers – 750 GPM for 30 minutes.

c. Motels, light industry and schools – 750 GPM for 30 minutes.

d. Heavy industry, warehouse and office buildings greater than 300,000 square foot – Minimum 1000 GPM for 45 minutes.

e. Single-family residential – 500 GPM for 30 minutes.

1607 E. Water mains and appurtenances.

1. *Water mains.*

a. Either ductile iron pipe (DIP) or polyvinyl chloride (PVC) shall be used for water mains (see later section for material specifications). Water mains shall be DIP under pavement, at stream crossings and where mains cross under storm sewers, sanitary sewer lines or other utilities.

b. Existing streets. On existing roads, water lines shall be located on the north and west side of the road, within five feet of the right-of-way line with a minimum cover of 48 inches below the level of the roadbed or with 48 inches of cover, whichever is more restrictive. Permission must be obtained by the city to vary from this requirement. Fire hydrants on existing roads shall be located between the waterline and the street right-of-way.

c. New streets. All curbing must be installed before any after lines are installed. Water lines on new streets shall be located on the north and west side of the street, as shown in the standard drawings. Fire hydrants shall be located between the water main and the street right-of-way. Mains shall be located in accordance with the utility location detail (see standard details).

2. *Service laterals.*

d. Service laterals shall be located with a minimum cover of 48 inches within the right-of-way and rise to a buried depth of 18 inches at the water meter location. There shall be no splices of copper pipe under any pavement.

e. Service laterals crossing all roads shall be placed inside a minimum of a 2½-inch diameter PVC casing.

f. A "W" shall be sawed into the curb where each service tap is made to indicate its permanent location.

g. Copper tubing shall be used for all services laterals.

h. Lateral shall be left exposed vertically as much as possible until all remaining utilities are installed.

i. Services for subdivision shall be sized and located as shown on the standard detail drawings.

3. Water meters shall be located at the limits of the street right-of-way.

4. *Backflow preventer.* All water meters shall be provided with a backflow preventer.

5. Fire line meters shall be designed to meet site-specific conditions, see standard details for conceptual layout of meter.

6. Detector meters shall be designed to meet site-specific conditions, see standard details for conceptual layout.

7. *Water valves.*

j. At intersections. Valves on water mains at intersections shall be located behind the curb. Generally, the number of valves shall equal the number of streets in the intersection minus one. The city may require valves in excess of this requirement if the water system layout warrants additional valves.

k. At end of line. A water valve and a minimum of 36 feet of pipe shall be provided at the end of all lines for phased developments, and at locations where the water main may be extended in the future for water system improvements. The end of the line shall be provided with a temporary plug and thrust collar. A three-quarter-inch tap for chlorination/dechlorination purposes shall be provided.

l. Along mains. Maximum spacing of water valves along water mains shall be 1,000 feet. In addition, a hydrant lead valve shall be located at every fire hydrant.

m. All valves shall have a concrete pad.

8. *Valve markers.* One concrete valve marker shall be furnished and set at each line valve.

9. *Air and vacuum (A & V) release valves.* Air and vacuum release valves shall be located where appropriate as determined by the design professional responsible for the project design. All A & V release valve locations are subject to approval of the city. In general, within subdivision A & V release valves are not necessary as long as services are located at the water main high points.

10. *Polyethylene encasement.* DIP water mains shall be provided with polyethylene encasement where the water main either crosses, or is in close proximity to, a steel gas main.

1607 F. Water line extension requirements.

1. Developers shall extend all water mains along their entire property frontage if the existing main is adjacent to the proposed development. The size of the extension shall be at least the size of the existing main and may be required to be larger according to the city's water plan.

1608. MATERIAL SPECIFICATIONS

1608 A. All materials used in the work including equipment shall be new and unused materials of a reputable U.S. manufacturer conforming to the applicable requirements of the specifications. No materials shall be used in the work until the city has approved them.

1608 B. Ductile iron pipe.

1. DIP shall be designed in accordance with ANSI A21.50 (AWWA C150), latest revision, and manufactured in accordance with ANSI A21.51 (AWWA C151), latest revision. Wall thickness class shall be Class 50, unless specified otherwise.

2. The pipe shall have an outside asphaltic coating in accordance with ANSI A21.51 (AWWA C151), latest revision, and shall also have standard cement lining inside with asphaltic seal coat per ANSI A21.4 (AWWA C104), latest revision.

3. Pipe joints. Except where restrained or flange joints are specified, shall be pushed-on or mechanical joint type joints conforming to ANSI A21.11 (AWWA C111), latest revision. The pipe shall be in 18- to 20-foot nominal lengths with standard deflection pipe sockets. Where restrained joints are shown or specified on pipe large than 12-inch diameter, the joints shall be "Lok-Fast", "Lok-Ring", or equal.

4. Where river-crossing pipe is shown or specified, the pipe shall be "Flex Lok Boltless Ball Joint Pipe" as manufactured by American Pipe or approval equal.

5. Where specified, flanged pipe shall meet ANSI A21.51 and be used with fittings meeting ANSI A21.10 (AWWA C110) latest revision.

1608 C. Copper tubing for water service.

House service pipe shall be copper service pipe, type K, soft temper, seamless copper tubing, conforming to Federal Specification WW-T-T00. Compression joints shall be used. No joints shall be allowed under paved roadway.

1608 D. Steel casing pipe.

Steel casing pipe shall conform to A.S.T.M. Designation A-139, Grade B, electric fusion welded steel pipe. The pipe shall have a minimum tensile strength of 35,000 psi; both the exterior and interior of the pipe shall have a coal tar varnish coating.

1608 E. Pipe fittings.

All fittings shall be ductile iron furnished in accordance with ANSI Specifications A21.10 (AWWA C100), latest revision, and have a minimum of 250 psi pressure class rating. Joints shall be mechanical joints with ductile iron retainer glands conforming to ANSI Specification A21.11 (AWWA C111), latest revision. Ductile iron retainer gland shall be equal to EBAA Mega-Lug. All fittings shall be furnished with a cement mortar lining.

1608 F. Butterfly valves.

1. All butterfly valves shall be bubble-tight closing at the rated pressure with flow in either direction, and shall be satisfactory for applications involving throttling service and frequent operations or operations after long periods of inactivity. Valves shall meet the full requirements of AWWA Standard C504, latest revision for 150-psi working pressure and shall be suitable for above ground or buried service.
2. All interior ferrous surfaces of valves larger than 12 inches shall have a special epoxy coating meeting the requirements of AWWA C550.
3. Valve bodies shall be equipped with integrally cast mechanical joint ends meeting ANSI Specification A21.11 (AWWA C111). Mechanical joints shall be fitted with retainer glands with setscrews on ductile iron pipe.
4. Butterfly valves installed underground shall come equipped with the following manual operator. The required manual operators shall be of the traveling nut, self-locking type, designed to hold the valve in any intermediate position between fully open and fully closed without creeping or fluttering. Operators shall be equipped with mechanical stop-limiting devices to prevent over travel of the disc in the open and closed positions. Valves shall close with a clockwise rotation. Operators shall be fully enclosed and designed for buried operation.

1608 G. Gate valves.

Valves 12 inches and smaller shall be gate valves. These valves shall be non-rising stem design, iron body, bronze mounted with a compression, resilient seat manufactured in accordance with AWWA Standard C509, latest revision. Valves shall be designed for a minimum working pressure of 200 psi and shall have two-inch square operating nuts, except in meter vaults where hand wheels shall be installed. Valves shall have non-rising stems, shall open when turned counter-clockwise and shall meet AWWA Specifications for Class C valves. Valves with flanged connections shall conform to ANSI B16.1. valves. Valves with flanged connections shall conform to ANSI B16.1. Mechanical joints shall be fitted with retainer glands and set screws on ductile iron pipe. Retainer glands shall be equal to EBAA Mega-Lug. Gate valve shall be as manufactured by American Darling, or equal.

1608 H. Valve boxes.

Each valve shall be provided with a valve box. Valve boxes shall be approved standard cast iron, adjustable-shaft boxes having a minimum shaft diameter of 5½ inches. The casting shall be coated with two coats of coal tar pitch varnish. The lids of all boxes shall bear the word "Water" or the letter "W". Boxes shall be equal to Vulcan Pattern VVB-4.

1608 I. Air and vacuum relief valve assemblies.

1. Air and vacuum relief valves shall be cast iron body and covers with bronze trim, stainless steel float, Buna-N-Seal, and shall be designed for a minimum working pressure of 150 psi.
2. The valve shall be designed to exhaust large quantities of air during the filling period and small quantities of air that collect in the line while operating under pressure. The valves shall be equal in all respects to Empire No. 950 combination air release valves.
3. Gate valves between water main and air relieve valve shall be bronze, solid wedge with screw connection equal to Grinnel Company's Figure 103 or Jenkins Company Figure 370.

1608 J. Service saddles.

Service saddles shall be Smith Blair double strap or approved equal.

1608 K. Pipe couplings.

Pipe couplings shall be mechanical joint solid sleeve conforming to ANSI/AWWA C153/A21.53.88 as manufactured by American Pipe or approved equal. Spacer rings shall be used with all solid sleeves. Field joints shall be made to insure permanent tight joints under all reasonable conditions of expansion, contraction, shifting, etc.

1608 L. Curb stops.

All metal parts of curb stops shall be made of bronze. The ¾-inch and one-inch stops shall be FIPT X compression McDonald 6102 WT, full port, or approved equal. The cock shall be operated with a combined cap and tee and shall open when turned counter-clockwise.

1608 M. Corporation cocks.

Corporation cocks shall have quarter bend. The ¾-inch and one-inch corporation cocks shall be McDonald 4701T or approved equal. All metal parts of the cock assembly shall be made of bronze. The cock shall be operated with a tee head and shall open when turned counter-clockwise.

1608 N. PVC casing pipe.

PVC cashing pipe used for long-side services shall be schedule 40, a minimum of one inch larger in diameter than the service line, but no less than 2½ inches in diameter.

1608 O. Meter boxes. The meter box and lid shall be cast iron of the standard size, 19½-inch X 12½-inch X 12-inch Schofield.

1608 P. Tapping valves.

Tapping valves shall be Mueller, M.J. Type, 200 psi, H-667, or equal.

1608 Q. Tapping sleeves.

Tapping sleeves shall be power seal 3490 stainless or equal.

1608 R. Water meters.

Nominal ¾-inch size meters shall be Neptune Trident 10; ⅝-inch X ¾-inch meters, one-inch meters shall be Neptune Trident 10; 1½-inch meters shall be Neptune Trident 10, FIPT outlet threads; two-inch meters shall be Neptune Trident or two-inch Compound TRU/FLO Meter, FIPT outlet threads. Three-inch and large meters shall be approved Neptune equal to the application of use. All meters shall read in gallons.

1608 S. Unions and adapters.

All ¾-inch adapters shall be CTS plastic nonflare X Male IPT adapter Hays 5605 CF. One-inch adapter for plastic to galvanized male shall be Hays 5605 DF, or Mueller H-15428. All ¾-inch and one-inch plastic unions shall be CTS plastic X CTS plastic three-part nonflare union, Hays 5615 DR or Mueller H-15403. Y connections (yokes) shall be McDonald #08yst, full port.

1608 T. Backflow prevention.

All new water service connections shall be equipped with a backflow prevention device on the customer side of the meter as shown on Standard Drawings No. 600-4, 600-5 and 600-6 of this chapter. Certain customers may also be required to install additional cross-connection and backflow prevention devices in accordance with Article VI, Water, of Chapter 94, Utilities, of the Code of Griffin, Georgia.

1608 U. Valve markers.

Valve markers shall be made of 3,000 psi concrete and shall be four feet long and four inches on each side, with four No. 4 reinforcing bars. The markers shall be set with an even number of feet between the centerline of the valve and the centerline of the aluminum disc in the top of the marker and the distance in feet between the valve and marker shall be stamped in the marker at the time of setting.

1608 V. Polyethylene encasement.

Polyethylene film shall be manufactured of virgin polyethylene material conforming to ASTM standard specifications D-1248-78 Type I, Class A or C, Grade E-1. The

polyethylene film shall have a minimum thickness of eight mil. The polyethylene encasement material shall be provided in tube sizes adequate for the various size pipes.

1608 W. Insulators for DIP in steel casing.

Insulators shall be as manufactured by Cascade Waterworks Manufacturing Company, or approved equal. Insulators for 24-inch DIP carrier pipe shall be CCS-2580 and eight inches wide. Insulators for 12-inch DIP carrier pipe shall be CCS-1320 and eight inches wide. Insulators for eight-inch DIP carrier pipe shall be CCS-905 and eight inches wide. Insulators for six-inch DIP carrier pipe shall be CCS-690 and eight inches wide. All insulators shall have a stainless steel shell. Insulators shall be located within five feet of each end of the casing and there shall be two insulators per joint of pipe within the casing. The positioning of the casing insulators shall be centered for water mains.

1609. WATER SYSTEM CONSTRUCTION

1609 A. General.

1. It shall be expressly understood that these specifications are for installation of all underground water mains and appurtenances.
2. All work shall conform to the applicable provisions of the AWWA Specifications of latest revision except as otherwise specified herein.

1609 B. Trench excavation.

1. Trenches shall have a minimum width of 12 inches plus the diameter of the outside of the bell of the water main and the depth thereof shall be such that there shall be a minimum of 48 inches of cover measured below the roadway surface, natural ground, or proposed grade to the top of the pipe. Maximum trench width at the top of the pipe shall not be more than the outside diameter of the bell plus two feet. In cases where water lines cross above sanitary sewers, there shall be a minimum of 18 inches vertical separation between the water and sewer mains. In cases where a sanitary sewer crosses above water main, the sanitary sewer shall be DIP and incased in concrete. In cases where water mains parallel sewer mains there shall be a minimum of ten feet horizontal separation maintained between the mains.
2. Trenches shall be dug so the pipe can be laid to the alignment and depth required and the trench shall be of such width and shall be braced and drained so the workmen may work therein safely and efficiently. No chocking under the pipe will be permitted. All joints shall be as specified herein. Excavation must be made under the bell of each pipe so the entire length of the pipe will lie uniformly on the bottom of the trench and the pipe weight shall not rest on the bells. Trenches shall be free of water during the work.
3. Water lines shall have a minimum cover of 48 inches. All changes in grade shall be made gradually. At points of interference with storm sewers and cross drains, pipe will be run under the conflicting utility if the minimum cover cannot be maintained by going over the top of the pipe. Where the water main crosses beneath a storm sewer, there shall be a minimum of 12 inches clearance between the main and the storm sewer. The water main shall be DIP at all such crossings.
4. When laying pipe across watercourses, railroad crossings, or depressions of any kind, the minimum depth specified above shall be maintained at the bottom of the depression.
5. Where necessary, the line shall be lowered at valves so the top of the valve stem is approximately one foot below the finished grade. The trench shall be deepened to provide a gradual approach to all low points of the line.
6. Wherever rock is encountered in the excavation, it shall be removed by suitable means. If blasting is used for removal of rock, the contractor shall obtain all required state and local permits and take all proper safety precautions. He shall comply with all rules and regulations for the protection of life and property that may be imposed by any public agency having jurisdiction relative to the handling, storing and use of explosives. Before blasting, the contractor shall cover the excavation with heavy timbers and mats to protect the adjacent property owners from damage. All rock encountered shall be removed six inches below the

bottom grade of the trench and the trench built back to the correct grade with suitable material tamped into place. Sides of the trench shall be trimmed of projecting rock that will interfere with backfilling operations. When blasting, the blast shall be covered with heavy timber mats and such other precautions taken as to prevent damage to persons or property. The contractor shall be totally responsible for any damage resulting from blasting. Rock excavation by blasting shall be at least 75-feet in advance of pipe laying.

7. After the pipe has been laid, backfilling shall be done in two distinct operations. In general, all backfill beneath, around and to a depth of 12 inches above the top of the pipe shall be placed by hand in four-inch layers for the full width of the trench and thoroughly compacted by hand with vibrating equipment. Care shall be taken so the pipe is not laterally displaced during backfilling operations. The backfill lifts shall be placed by an approved method in accordance with that hereinafter specified. Backfill materials shall be the excavated materials without bricks, stone, foreign matter or corrosive materials, where not otherwise specified or indicated on the plans.

8. Backfill under permanent concrete or bituminous pavement or floors and as elsewhere specified or indicated on the plans shall be approved bank-run sand or gravel or crushed stone, free from large stones and containing no more than ten percent by weight of loam or clay. This backfill shall be compacted to 100 percent as determined by the modified Proctor test for the top two feet of trench and 95 percent by the modified Proctor test from pipe bedding to two feet below trench top. Mechanical vibrating equipment shall be used to achieve the required compaction.

9. Backfill under gravel or crushed stone surfaced roadways and low-type bituminous surfaced roadways shall be the approved suitable excavated material placed in six-inch layers thoroughly compacted for the full depth and width of the trench, conforming to the compacting, density compaction method and materials as specified in H above.

10. Backfill in unpaved areas shall be compacted with mechanical vibrating equipment to 90 percent as determined by the modified Proctor test. Backfill material from pipe bedding to ground surface by shall be excavated earth free from large stones and other debris.

11. The contractor shall fully restore and replace all pavement, surface structures, etc., removed or disturbed as part of the work to a condition equal to that before the work began.

12. Where sheeting is used in connection with the work, it is in no case to be withdrawn before the trench is sufficiently filled to prevent damage to banks, road surfaces, adjacent pipes, adjacent structures or adjacent property, public or private.

1609 C. Laying of pipe.

1. All pipes shall be laid straight, true to line and grade. Bell and coupling holes shall be dug in the trench and the pipe shall have a continuous bearing with the trench bottom between bell or coupling holes. No shimming or blocking up of the pipe shall be allowed. When the work is not going on, all pipe openings shall be securely closed by the insertion of the proper size plug and caulking so dirt and debris will not be washed into the pipe in case of rain.

2. [Reserved]

3. In making the joints with ductile iron pipe, the spigot end of the pipe and the inside of the bell shall be thoroughly cleaned and the gasket inspected to see that it is properly placed. Lubricant shall be applied to the spigot end of the pipe and it shall be inserted into the bell of the adjoining pipe to the stop mark on the pipe.

1609 D. Thrust restraint for pressure lines.

1. *Reaction blocking.*

a. Underground pipe laid around curves, at all unsupported changes of direction, and all tees, wyes, crosses, plugs and other similar fittings shall be solidly and property blocked with concrete against solid earth. This blocking is designed to take the reaction of the main pressure and to prevent lateral movement of the pipe or fittings under pressure. Reaction blocking shall be installed at all locations requiring it and where tie rods and clamps are not called for in the plans. Concrete for reaction blocking shall have a minimum compressive strength of 3,000 psi at 28 days. The blocking, unless otherwise shown, shall be placed so the pipe and fitting joints will be accessible for repair.

b. Reaction blocking shall be constructed as per AWWA Standard C600 Section 3.8, latest revision. It shall be constructed in conformance with the Standard Detail Drawings for Reaction Blocking.

2. *Retainer glands.* Mechanical joint fittings on ductile iron pipe shall be installed with retainer glands in compliance with the requirements of AWWA C600.

1609 E. Setting valves and fittings.

1. Valves shall be set plumb, and shall have cast iron valve boxes. The valve boxes shall be placed directly over the valve and set plumb, the top of the box being brought to the surface of the ground. After the boxes are in place, earth shall be filled in the trench and thoroughly tamped around the box. After all settlement has taken place, a concrete collar shall be constructed for each valve box.

2. Fittings shall be properly braced to insure they will not be blown off or broken loose under the greatest possible working pressure. All fittings shall be mechanical joints unless specified otherwise. In situations where there is insufficient undisturbed earth to act as a bearing surface or where otherwise directed by the city, fittings shall be restrained by the use of threaded rods or other method acceptable to the city.

3. Prior to blocking any joint or fitting with concrete, the joint or fitting shall be wrapped with polyethylene film in such a manner that the concrete will not stick directly to the pipe but so the load bearing capacity of the blocking will not be affected. Polyethylene film shall be installed at other points along the water main where directed by the city.

1609 F. Placing steel casing pipe.

Unless directed otherwise, the installation of steel casing pipe shall be by the dry bore method. The hole is to be mechanically bored and cased through the soil by a cutting head on a continuous auger mounted inside the casing pipe. The installation of the casing and boring of the hold shall be done simultaneously by jacking. Lengths of pipe are to be adequately welded to the preceding section installed. Excavation material shall be removed and placed at the top of the working pit. Backfill material and methods of backfilling and tamping shall be as required under Section 1609 E above. Carrier pipe shall be inserted within the casing by use of stainless steel casing spacers. Intervals shall be as recommended by the manufacturer.

1609 G. Marking of valve locations.

1. Each main line water valve shall be marked by cutting a letter "V" in the curb. The "V" shall be turned to point toward the valve that may be either in the street or in the grass behind the curb. The letter height shall be four to six inches.

2. Concrete valve markers shall be set for main line water valves with an even number of feet between the center line of the valve and the center line of the aluminum disc in the top of the marker and the distance in feet between the valve and marker shall be stamped in the marker at the time of setting.

1609 H. Dewatering trenches.

The contractor shall do all necessary pumping or bailing, build all drains and do all other work necessary at his own expense to keep the trenches clear of water during the progress of the work.

1609 I. Bracing, sheeting and/or shoring.

Whenever the condition of the ground is such that it is necessary to protect the work, the street, the roadway or the workmen, the sides of the trench shall be supported with suitable bracing, sheeting and/or shoring to be furnished by the contractor at his own expense.

1609 J. Rock excavation.

1. Drilling and blasting operations shall be conducted with due regard for the safety of persons and property in the vicinity and in strict conformity with requirements of all ordinances, laws and regulations governing blasting and the use of explosives. Rock excavation near existing

pipelines or other structures shall be conducted with the utmost care to avoid damage. The contractor, to the satisfaction of the city and property owner, shall promptly repair injury or damage to other structures and properties.

2. Rock in trenches shall be excavated over the horizontal limits of excavation and to depths as shown in table 16-2 below.

Table 16. 2 Rock Excavation Depths

Size of Pipeline (inches)	Depth of Excavation Below Bottom of Pipe (inches)
4 and less	4
4 to 6	6
8 to 18	8
18 to 30	10
Over 30	12

3. The undercut space shall then be brought up to grade by backfilling with Size #57 crushed stone material or approved equal.

1609 K. Locations and protection of existing underground utilities.

It is the responsibility of the contractor to locate and protect the underground utilities. The contractor shall repair utility lines or services he damages at his own expense.

1609 L. Connection to existing city water system.

1. Requirements for fire line connections. All persons desiring a tap must make application at the city prior to the tap being made. The contractor shall furnish the following information when making application:

- **a.** Approved plans for the project.
- **b.** Copy of street or highway permit, if applicable.
- **c.** Meter size including detector meter, if applicable (city may require installation of a master meter at the point of tie-in if it is determined that a substantial water loss in the development may occur).
- **d.** Billing address and purchase order, if required.
- **e.** Plan and profile of meter installation larger than two inches.

2. City makes the connection:

- **a.** The contractor shall furnish the following at the site:
  - **i.** Tapping sleeve and valve installed on the line and ready for tapping.
  - **ii.** Proper traffic control devices and person(s) to direct traffic if required.
  - **iii.** Backhoe or lift capable of handling the tapping machine.
  - **iv.** Minimum of three men to assist with the work.
- **b.** The contractor will be billed for the tap plus an hourly rate, plus overhead costs, for the city's operator, his helper, truck and any other equipment used if made by city forces.

3. Private contractor makes the connection:

- **a.** City personnel shall supervise the tap and associated work by private licensed utility contractor.
- **b.** All taps shall be made on wet line.
- **c.** All taps to be made with saddles or tapping sleeves.

1609 M. Street cuts.

1. All paved roads will be bored and cased. A bore must be attempted before consideration will be given to cutting the street.

2. One lane of traffic shall be maintained open at all times. Construction work shall be limited to time between 9:00 a.m. and 4:00 p.m.

3. The contractor shall furnish traffic control devices and person(s) to direct traffic, if required.

4. The above requirements may be altered with the written approval of the city in extenuating circumstances.

1609 N. Standard drawings

Installation of fire hydrants, water valves, valve boxes, meters, long side services water lines, etc. shall be made in accordance with the applicable standard design drawings in this manual.

1609 O. Clean up.

Prior to requesting the final inspection, the contractor shall do the following:

1. Remove and dispose of, in an acceptable manner, all shipping timbers, shipping bands, spacers, excess materials, broken material, crates, boxes and any other material brought to the job site.
2. Repair or replace any work damaged by the water line construction.
3. Regrade and smooth all shoulder areas disturbed by the construction.
4. Pour concrete collars around all valve boxes outside paved areas.
5. Insure that all fire hydrants are set to grade and that all valves have been located and are fully open.

1609 P. Interruption of water supply during construction

A minimum of two hours advance notice shall be given to any occupied building served by a water line that is required to be shut off. Occupants shall be informed of the date, time of cutoff and the duration of stoppage. Failure to do so will make the contractor liable for any damages reported to the city. For outages affecting several customers, notice shall be prepared and placed with local news media and to be coordinated with water and wastewater department.

1610. INSPECTION AND TESTS

1610 A. Scope.

This section pertains to the inspection and testing of installed water lines requiring testing to assure proper operation and service.

1. All lines designed to operate under pressure shall be successfully tested. Tests of installed piping shall consist of leakage and disinfection tests.
2. All piping to be tested must satisfactorily comply with the pressure tests before being eligible for acceptance.
3. Tests shall be conducted in accordance with AWWA Standard C-600 except as otherwise herein specified.

1610 B. Leakage testing.

1. After all piping has been placed; the contractor in the presence of a city inspector shall test each pipe run. Tests shall be continued until all leaks have been made tight to the satisfaction of the inspector. The contractor shall furnish all necessary meters, pumps, gauges, bulkheads and other materials and appliances necessary to conduct the required tests. Every precaution must be taken to valve-off or otherwise protect control equipment in or attached to the pipeline to prevent damage or injury thereto.
2. Before applying the specified test pressure, all air shall be expelled from the pipe. If hydrants, blow-offs or air release valves are not available at the high places, the contractor shall make the necessary taps at points of highest elevation before the test is made and insert plugs after the test has been completed.
3. Prior to the pressure test, pipe laid in trenches shall be adequately backfilled to secure the pipe during the test. Any observed leakage shall require corrective measures to pipe lines and/or joints as to the satisfaction of the inspector.
4. The city will furnish the necessary water for testing and disinfection of the lines. However, any water lost through breakage of lines, or unnecessary or excessive flushing of lines, will be charged to the contractor at the current residential rate. All lines shall be tested to a pressure of 200 psi for a minimum time of two hours. Test pressure shall not vary by more than five psi

for the duration of the test. This may require periodic pumping, in which case the added water will be counted as part of the leakage. Lines shall be tested in sections between the valves. Allowable leakage amounts are found in table 16-3 below:

Table 16. 3 Allowable leakage table (gph/1,000 ft. of pipeline*)

	Pipe Diameter (inches)												
	3	4	6	8	10	12	14	16	18	20	24	30	36
Maximum Leakage	0.32	0.43	0.64	0.85	1.06	1.28	1.48	1.70	1.91	2.12	2.55	3.19	3.82

Editor's note— *If the pipeline under test contains sections of various diameters, the allowable leakage will be the sum of the computed leakage of each size.

5. Any section of the line not meeting the above test shall have the leaks found and corrected at once and re-tested until the leakage falls within the allowable limits. Leakage testing must be witnessed and approved by the city.

1610 C. Disinfection.

After leakage testing and all necessary repairs have been made, the lines shall be flushed clean and then disinfected in accordance with AWWA Standard for Disinfecting Water Mains, C651-92, subject to the following special conditions:

1. The method of disinfection shall be the Continuous—Feed Method in accordance with AWWA C651-92, Section 5.2. The potable water shall be chlorinated so after at 24-hour holding period in the main, there will be a free chlorine residual of not less than ten mg/L.
2. The form of chlorine may be either: a one percent solution made from either sodium hypochlorite or calcium hypochlorite. The chlorine shall be pumped and metered into the pipeline. Water must be flowing during the feeding operation and the injection point must be located so the flow of water will disperse the chlorine throughout the pipeline.
3. The contractor has the option of discharging the highly chlorinated water flushed from the pipeline to the existing sewers (if available) or dechlorinating prior to discharge.
4. After 24 hours, the line shall be flushed until the chlorine content is not more than two parts per million, and samples taken at various points along the line. The contractor has the option of delivering the samples to the water and wastewater department for testing or to an independent laboratory. The laboratory must be pre-approved by the owner and hold appropriate certification from Georgia environmental protection division.
5. The city must witness all flushing, disinfection, sampling and dechlorination work. The contractor shall outline his planned procedures for these tasks and obtain approval of the owner before commencing this work.
6. Dechlorination.
   a. After the disinfection process has been completed and the contractor elects to dechlorinate, the heavily chlorinated water shall be flushed from the main until measurements show that the chlorine concentration in the water leaving the main is no higher than that generally prevailing in the distribution system or is acceptable for domestic use. The area where the chlorinated water is to be discharged shall be inspected. If there is any possibility that the chlorinated discharge will cause damage to the environment, then a neutralizing chemical shall be applied to the water to be wasted to neutralize thoroughly the chlorine residual remaining in the water.
   b. The chlorine residual of water being disposed may be neutralized by treating the water with one of the chemicals listed in table 16-4 below:

Table 16. 4 Water Neutralizing Chemicals

Chemical	Residual Chlorine Concentrations	Sulfur Dioxide (SO2)		Sodium Bisulfite (NaHSO3)		Sodium Sulfite (Na2SO3)		Sodium Thiosulfate (Na2S2O3H20)	
	(mg/L)	lb	kg	lb	Kg	lb	kg	lb	kg
	1	0.8	0.36	1.2	0.54	1.4	0.64	1.2	0.54
	2	1.7	0.77	2.5	1.13	2.9	1.32	2.4	1.09
Amounts	10	8.3	3.76	12.5	5.67	14.6	6.62	12.0	5.44
	50	41.7	18.91	62.6	28.39	73.0	33.11	60.0	27.22

Editor's note— *Amounts of chemicals required to neutralize various residual chlorine concentrations in 100,000 gal. (378.5 m3) of water.

1610 D. Contractor qualifications.

1. Licensing and safety. All contractors who work on water systems that will be owned by the city must be licensed in accordance with State of Georgia law and local ordinance. Compliance with applicable safety regulations is the responsibility of each company engaged in the work. The city shall assume no responsibility for the actions of others on the job site. It is the responsibility of those installing water mains and related appurtenances to conform to OSHA regulations, 29 CFR Part 1926, Subpart P, Paragraph 1926.650 through 1926.653 (publications from OSHA can be obtained by contacting OSHA Publications Distribution, Washington, D.C.).
2. Contractors performing water system installations must be approved by the city and shall be completely familiar with the procedures and contract requirements associated with this type project.
3. Unsatisfactory work may result in the loss of privilege to obtain a permit for future work in the City of Griffin.

1610 E. Construction inspection.

1. Responsibility for inspection. The developer's contractor will be responsible for the quality, accuracy and workmanship of his completed work. In addition, the developer shall employ a qualified professional (this shall normally be the same design professional who prepared the plans for the work) to review the quality of work as required during construction and to oversee the various specified tests and inspections.
2. City personnel will visit the job site on a periodic basis and make spot checks, as they deem appropriate. The city shall have the right to review and inspect all construction and may reject any work that does not meet quality control standards.
3. Project access. Authorized representatives of the city, which may include employees, city engineering consultant, state or federal agencies shall have access to the site for inspection at all times.
4. The developer, contractor(s) and the developer's professional responsible for inspection will be required to attend a pre-construction conference with the city. At the pre-construction conference, the contractor will submit to the city, in writing, the date they proposed to begin construction. The contractor shall provide notification by phone any time the work is to be vacated and will provide notice by phone prior to resuming work.
5. The developer's professional shall request the final inspection.
6. The city inspector may have informal verbal communications with the contractor foreman or superintendent at any time during construction. The city inspector will not direct the actions of contractor's workmen.
7. Communications during construction. All written communications regarding construction shall be directed to:

   Director of Water & Wastewater
   City of Griffin
   P. O. Box T
   Griffin, GA 30224
   770-229-6424 or Fax No. 770-229-6439
8. Concealed work. The city inspector may direct the contractor to notify the city and receive inspection approval prior to concealing certain work such as valves, tees, fire hydrants, pipe bedding, reaction blocking, lot services, or other appurtenances.
9. Minimum inspection. The following minimum inspections and tests will be performed and certified by the professional employed by the developer to perform quality control checking on the construction work:
   a. Horizontal location. Horizontal location of the mains shall be checked by measuring distance from the back-of-curb to the main. Main sizes, valve, hydrant, service location and reaction blocking shall be checked.

b. Compaction of backfill. Compaction testing shall be required for mains constructed in paved areas or where pavement is planned. A minimum of two tests at each road crossing shall be conducted at varying depths. If any of these tests show failing results, then the failing backfill will be removed, re-compacted and re-tested and one additional area will be tested as well.

c. Pressure and disinfection tests shall be observed until each test if passed.

1610 F. Final inspections and conditional acceptance.

1. The developer's professional responsible for inspection of construction will provide the city with a certified statement after he completes his inspection, testing, and submittal of as-built drawings and easements. This statement must certify that all specified inspections and tests have been made and successfully passed, and that the work has been completed in substantial accordance with the approved plans and specifications. After receipt of this statement, the city will schedule a final inspection. A representative of the developer's professional and the contractor will be present during this final inspection. This final inspection will generally include spot checks of hydrants, valves and other appurtenances and a complete overview of the project. All valves shall be operated to insure all valves are in the fully open position.

2. Once all discrepancies are corrected, the city will issue a letter certifying conditional acceptance of the water system. This letter shall commence the start of the 24-month warranty period, which is required of the contractor.

3. On projects having phased development, this letter will allow the developer to apply for a permit for the next phase of development.

4. At the end of 24 months, the subdivision inspection team will reinspect the entire development. When all discrepancies have been corrected, the city will issue an acceptance letter and will begin perpetual maintenance and operation of the water system.

1610 G. Maintenance and payment bond.

The developer shall post a maintenance bond, in accordance with section 300.65 of this manual, on the facility for a two-year period after completion and conditional acceptance of the facility by the city. In addition, the developer shall post a payment bond on the facility for all subcontractor and material supplier work.

1610 H. Maintenance until final acceptance.

It shall be the developer's obligation to provide all maintenance for a two-year period after acceptance of the project by the city. At the end of the two-year maintenance period the city shall inspect the water system. Upon correction by the developer of all deficiencies noted by the city, the city will accept the water system for maintenance.

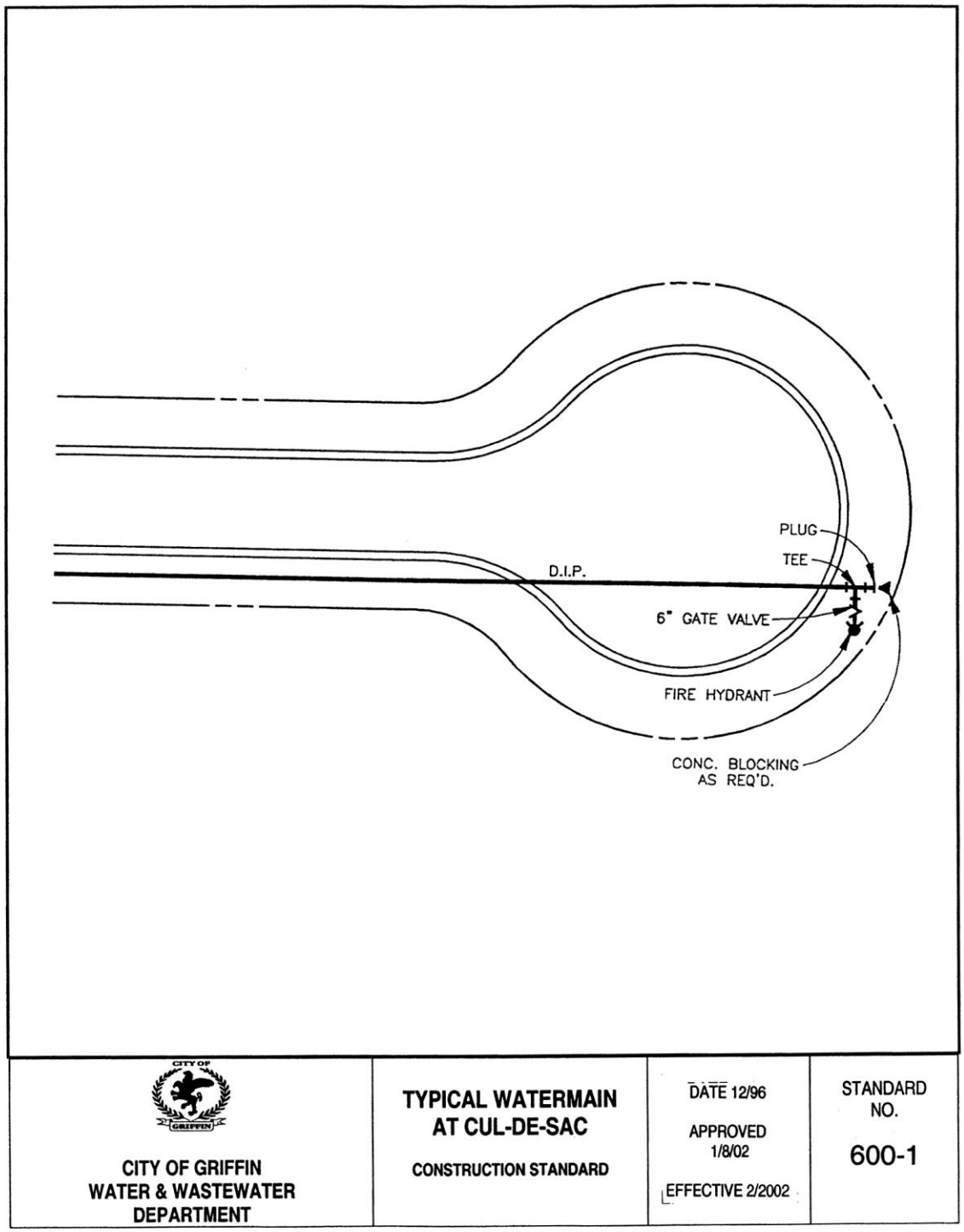

16. 1 TYPICAL WATERMAIN AT CUL-DE-SAC

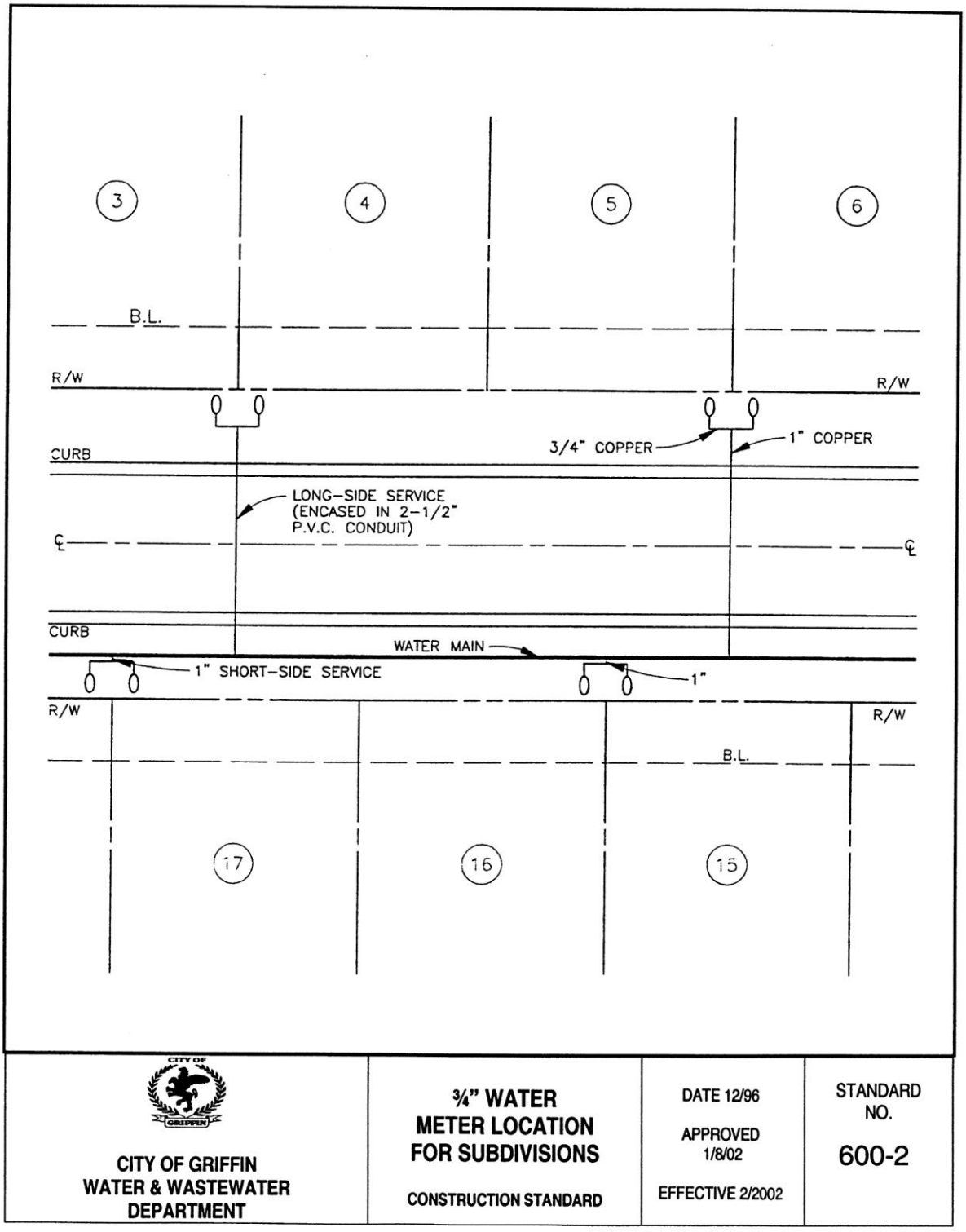

16. 2 3/4" WATER METER LOCATION FOR SUBDIVISIONS

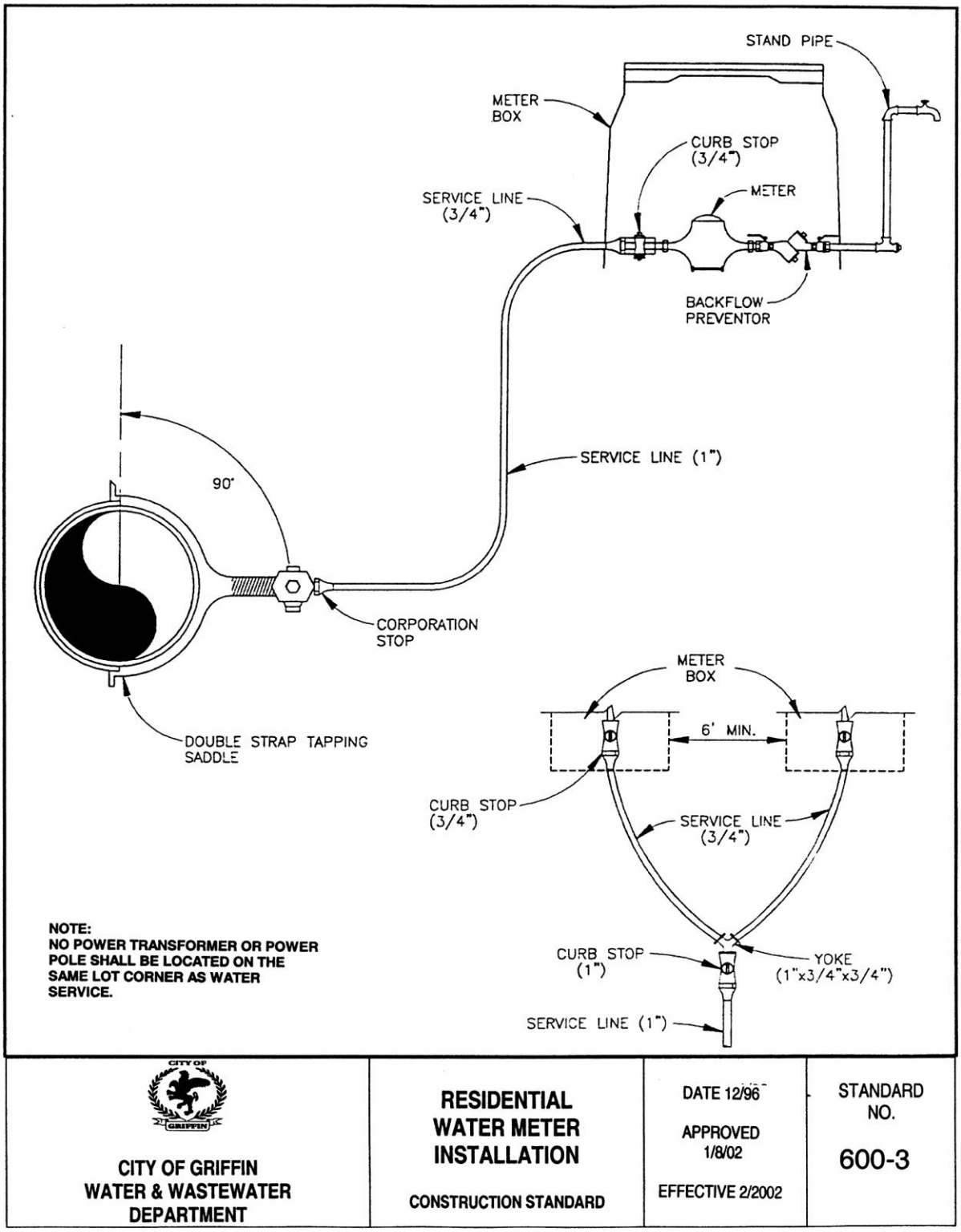

16. 3 RESIDENTIAL WATER METER INSTALLATION

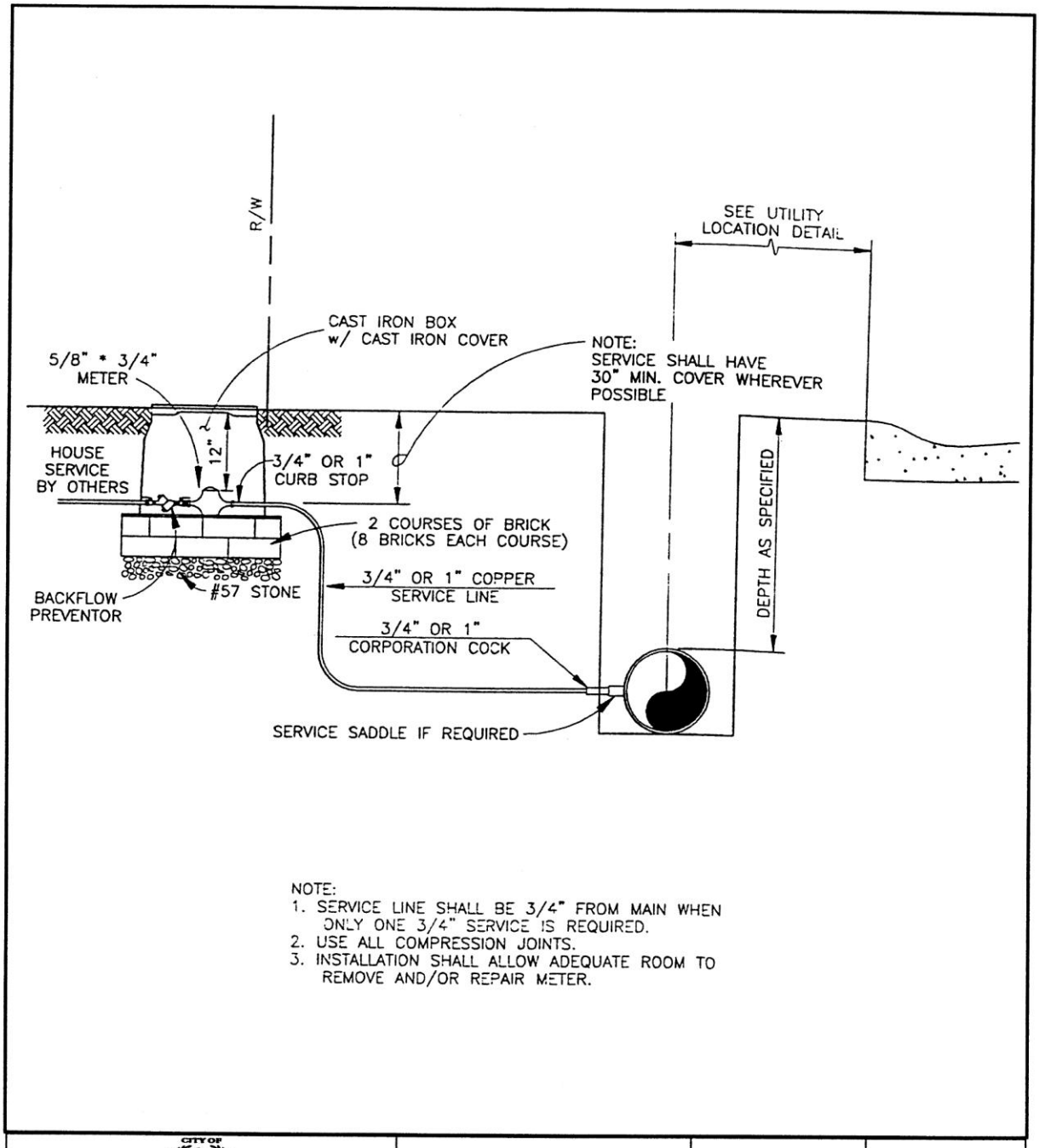

NOTE:
1. SERVICE LINE SHALL BE 3/4" FROM MAIN WHEN ONLY ONE 3/4" SERVICE IS REQUIRED.
2. USE ALL COMPRESSION JOINTS.
3. INSTALLATION SHALL ALLOW ADEQUATE ROOM TO REMOVE AND/OR REPAIR METER.

CITY OF GRIFFIN WATER & WASTEWATER DEPARTMENT	**HOUSE SERVICE INSTALLATION** CONSTRUCTION STANDARD	DATE 12/96 APPROVED 1/8/02 EFFECTIVE 2/2002	STANDARD NO. 600-4

16. 4 HOUSE SERVICE INSTALLATION

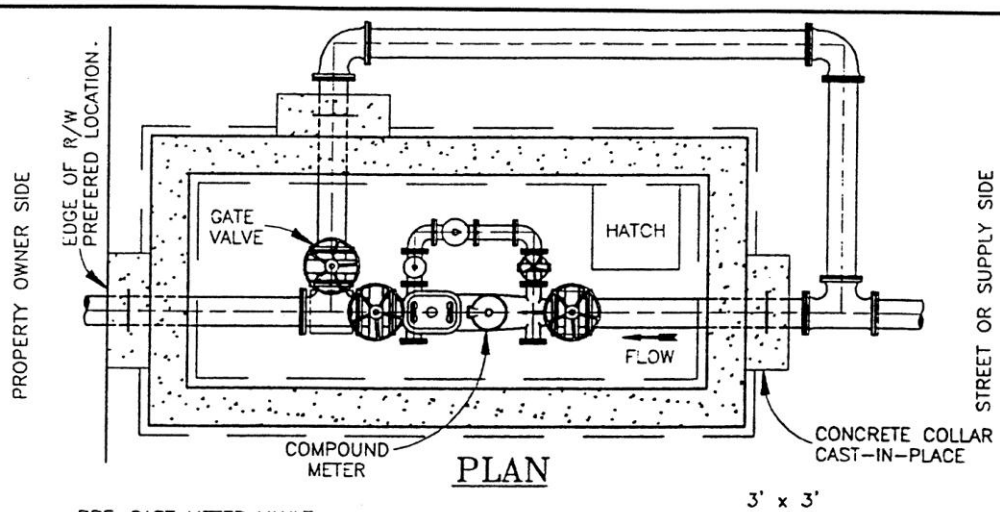

PLAN

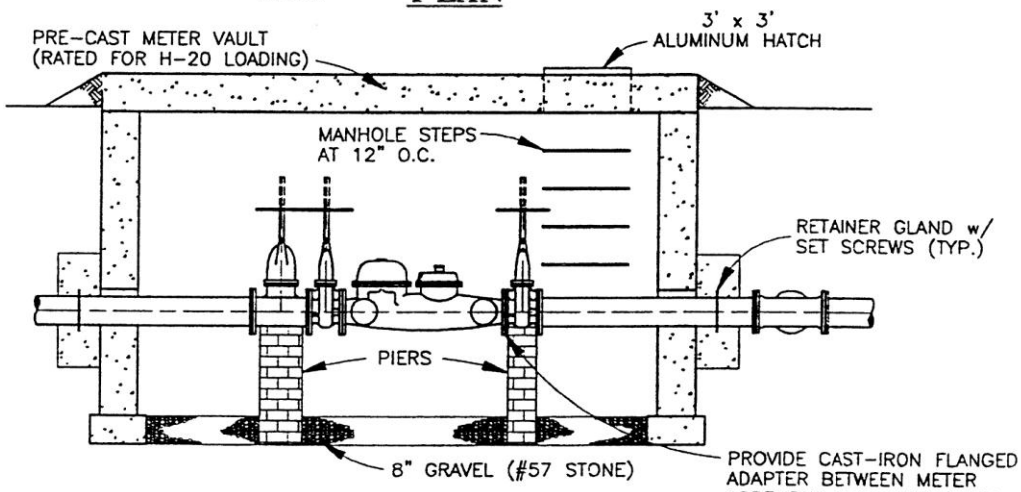

SECTION

NOTES:

1. BOXES EXCEEDING 7' IN DEPTH MUST BE APPROVED BY THE CITY.
2. WHEN METER BOX CANNOT BE LOCATED ENTIRELY ON R/W, A PERMANENT EASEMENT SHALL BE OBTAINED TO PREVENT FENCES OR OTHER OBSTRUCTIONS FROM BEING ERECTED AROUND THE METER BOX.
3. COVER OPENING & STEPS TO BE PLACED NEAREST THE METER REGISTER.
4. BYPASS REQUIRED (WITH VALVES).
5. THE METER MUST BE INSTALLED WITH AT LEAST 8 DIAMETERS OF STRAIGHT PIPE SAME SIZE AS METER ON THE INLET SIDE TO PERMIT ON-SITE MAINTENANCE AND CALIBRATION, AN INLET AND OUTLET GATE VALVE WITH BYPASS LINE ARE REQUIRED (SEE ILLUSTRATION).
6. THESE BOXES ARE NOT TO BE INSTALLED IN TRAFFIC AREAS WITHOUT PRIOR PERMISSION FROM THE CITY.
7. DOUBLE CHECK BACKFLOW PREVENTION REQUIRED ON PROPERTY OWNER'S SIDE OF METER. LOCATION SHALL BE APPROVED BY THE CITY.
8. ALL VALVES AND FITTINGS INSIDE THE VAULT SHALL BE FLANGED.
9. ALL FITTINGS OUTSIDE THE VAULT SHALL BE MECAHNICAL JOINT WITH RETAINER GLANDS.

CITY OF GRIFFIN WATER & WASTEWATER DEPARTMENT	**COMPOUND METERS AND VAULT** CONSTRUCTION STANDARD	DATE 12/96 APPROVED 1/8/02 EFFECTIVE 2/2002	STANDARD NO. 600-5

16. 5 COMPOUND METERS AND VAULT

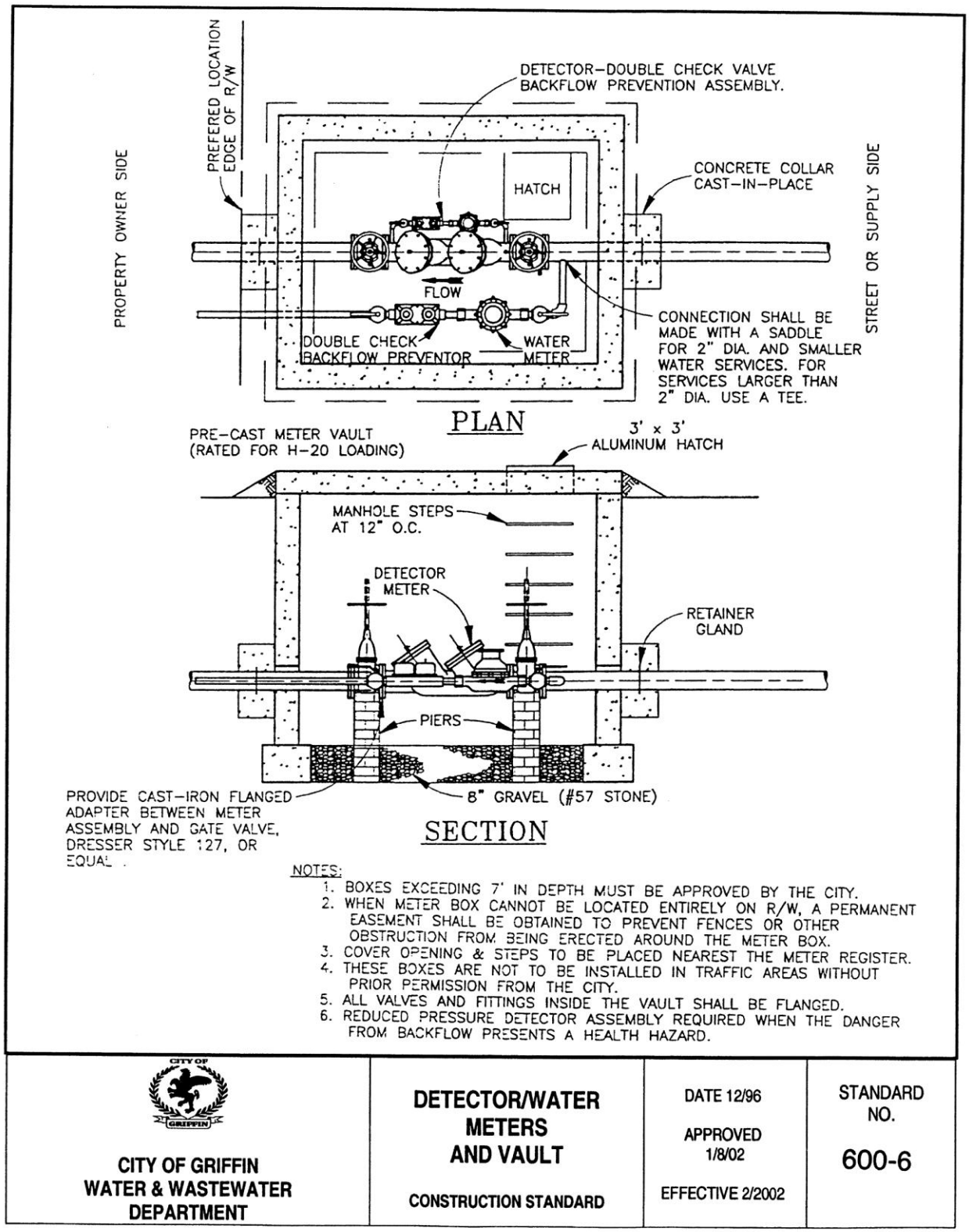

16. 6 DETECTOR/ WATER METERS AND VAULT

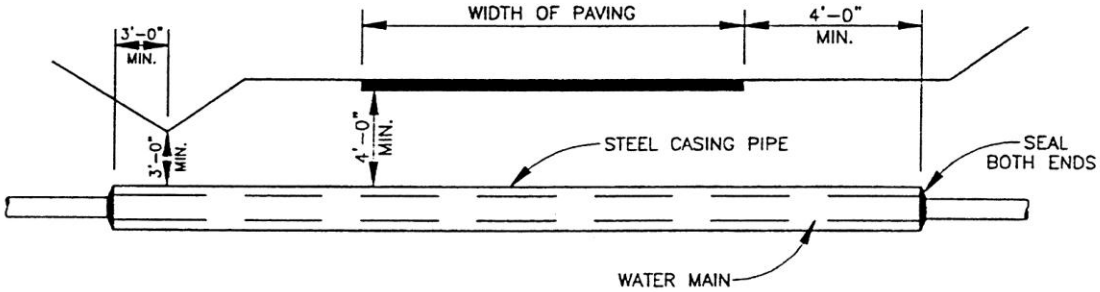

NOTE:
CASING PIPE SHALL EXTEND A MINIMUM OF 3' BEYOND TOE OF FILL SLOPES OR DITCH LINES AND 4' BEYOND EDGE OF PVMT. AND BACK OF CURB

CITY OF GRIFFIN WATER & WASTEWATER DEPARTMENT	**TYPICAL ROAD CROSSING** CONSTRUCTION STANDARD	DATE 12/96 APPROVED 1/8/02 EFFECTIVE 2/2002	STANDARD NO. 600-7

16. 7 TYPICAL ROAD CROSSING

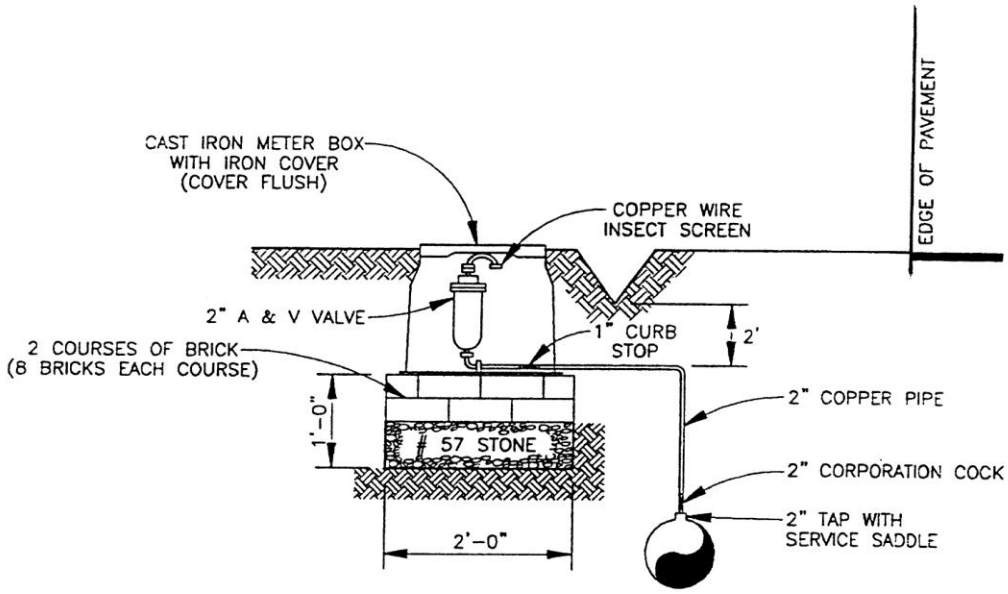

TYPICAL AIR & VACUUM RELEASE VALVE ASSEMBLY

NOT TO SCALE

CITY OF GRIFFIN WATER & WASTEWATER DEPARTMENT	AIR & VACUUM RELEASE VALVE ASSEMBLY CONSTRUCTION STANDARD	DATE 12/96 APPROVED 1/8/02 EFFECTIVE 2/2002	STANDARD NO. 600-8

16. 8 AIR AND VACUUM RELEASE VALVE ASSEMBLY

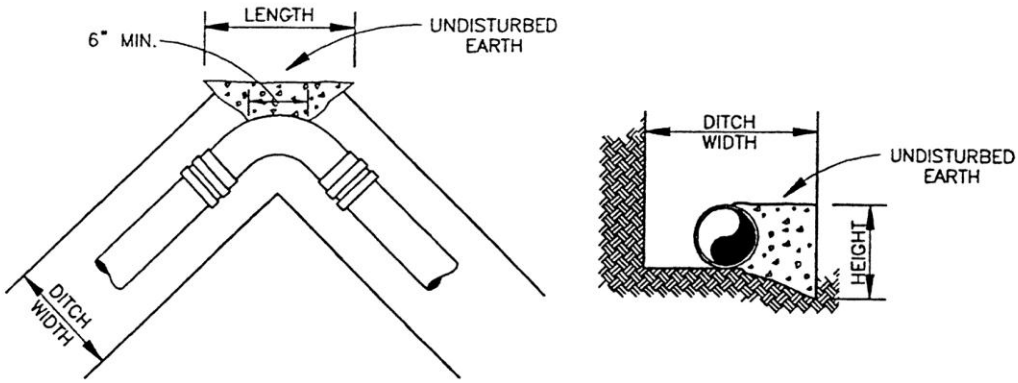

TABLE FOR CONCRETE BLOCKING
(16" PIPE, 200 PSI TEST PRESSURE)

FITTING	MINIMUM BEARING AREA LENGTH x HEIGHT
11 1/4° BEND	2' x 2'
22 1/2° BEND	2' x 3'
45° BEND	3' x 4'
90° BEND	6' x 4'
TEE	4' x 4'
DEAD END	4' x 4'

FOR SMALLER PIPE, THE ABOVE BLOCKING BEARING AREA CAN BE MULTIPLIED BY REDUCTION FACTORS SHOWN BELOW; HOWEVER, THE LEAST DIMENSION IS TO BE NOT LESS THAN 1 FOOT.

PIPE SIZE	REDUCTION FACTOR
12"	0.58
10"	0.41
8"	0.27
6"	0.16

NOTE:
SOIL BEARING STRENGTH OF 2500 PSI IS ASSUMED IN THE CALCULATIONS ABOVE.

CITY OF GRIFFIN WATER & WASTEWATER DEPARTMENT	CONCRETE BLOCKING DETAIL CONSTRUCTION STANDARD	DATE 12/96 APPROVED 1/8/02 EFFECTIVE 2/2002	STANDARD NO. 600-9

16. 9 CONCRETE BLOCKING DETAIL

Article 17. SANITARY SEWER SYSTEMS

1701. PURPOSE

1701 A. The purpose of this section is to address the minimum requirements for design and construction of public sanitary sewer systems and on-site sewage disposal system.

1701 B. The authority for discretionary provisions for design and construction of public sewer systems shall vest with the director of water and wastewater.

1701 C. This chapter is subject to periodic revision to meet changing requirements for materials, environmental regulations, etc. At the beginning of a project the user should verify that he has the latest edition.

1701 D. This document is intended to convey the general design and construction requirements for a typical project. It also lists specific requirements relating to inspection, testing and acceptance of facilities. It is not intended as a substitute for site-specific engineering and construction techniques. Individual project conditions may require waivers from the provisions in this document (see section 100.7 of this regulation).

1701 E. Sanitary sewer extensions into unincorporated Spalding County require approval by the board of board of commissioners. If approved, these extensions must meet all regulations and specifications set forth in the City of Griffin Development Ordinance.

1702. GENERAL POLICY AND REQUIREMENTS

1702 A. Sewer systems shall be designed in accordance with the densities and intensities reflected in the long range future land use map of the adopted City of Griffin comprehensive plan and the city's wastewater management plan.

1702 B. The approximate location and character of proposed public sewer facilities shall correspond with the existing and proposed sewer system map, as amended.

1702 C. Sewer systems shall be designed for the estimated future population from all contributing points under consideration. The estimated future population shall be based on the adopted comprehensive plan and/or the existing zoning of the land for the watershed to be sewered, whichever is greater.

1702 D. Except as provided below, all future buildings within the city's corporate limits that are to be utilized for human occupancy or any other use such as commercial or industrial purposes that requires sanitary sewerage facilities shall be connected to the public sanitary sewer system.

1. Waiver of the requirement to connect to public sanitary sewers will be considered on a case-by-case basis for non-subdivided, single-lot buildings when the nearest connection point to a public sanitary sewer is more than 200 feet from the property line, when such buildings are to be used for single-family dwelling or some other use where the wastewater loading is no more than that of a single-family dwelling. Requests for waiver must be accompanied by appropriate documentation as may be required by local public health officials.

1702 E. Sewer connections. All sewers and service laterals located outside of dedicated rights-of-way or public easements are regulated by the Standard Plumbing Code (SBCCI), and shall be privately maintained.

1702 F. Water supply interconnections. There shall be no physical connections between a drinking water supply and a sewer, or appurtenance thereof.

1703. PLANS AND SUBMITTALS

1703 A. General.

All projects which involve construction of lateral sewers, main sewers, trunk sewers, interceptor sewers or pumping facilities shall have detailed construction plans and specifications prepared by a registered professional engineer licensed in the State of Georgia or a design professional who meets state licensure requirements applicable to the profession or practice he is engaged in. Developments that only involve building sanitary sewers may have plans and specifications prepared by the project architect.

1703 B. Plan submission.

All development plans proposing a sewer system shall be submitted to the department of development services. The DODS shall coordinate the review and approval of all elements of the plan in accordance with the development regulations.

1703 C. Preliminary plan review.

Preliminary plans will be prepared and submitted for review as described in chapter 300 of these development regulations. Questions relating to availability of sanitary sewers and proposed location of connection should be resolved at this stage before proceeding with final planning. A submittal for preliminary plan review must include all land to be developed even though the land is to be developed in several phases or units. Availability determinations will be made for the total project.

1703 D. Final plan review.

All final plans for public sanitary sewer facilities shall be prepared in accordance with the requirements described in chapter 300 and as required in regulations promulgated by the Georgia Environmental Protection Division (EPD). The developer shall be responsible for submitting all necessary plans and other data to EPD for required approvals and for obtaining other permits, such as DOT, railroad, wetlands, etc.

1. The design of cross-country (undeveloped property) sanitary sewer lines and force mains shall be based on field-run surveys. The site plan for cross-country sanitary sewer lines and force mains need not show contour intervals, but the profiles shall be based on mean sea level elevation. Site plans for lift stations shall show existing and proposed contours.
2. In the event the subdivision is developed in phases, the final construction plans for sanitary sewers may be submitted in phases.
3. Profiles should have a horizontal scale of not more than 100 feet to the inch for cross-country lines and 50 feet to the inch for (existing and proposed) developed areas, and a vertical scale of not more than ten feet to the inch. The plan view should be drawn to a corresponding horizontal scale. The plan view should normally be shown on the same sheet as the profile. In any case both the plan and profile view should have line designations, station numbers, manhole numbers and any other indexing necessary to easily correlate the plan and profile view. The vertical datum used should be the elevation above mean sea level with benchmarks shown on the plans. Plans and profile shall show location of streets, storm sewer, water lines and their easements.
4. The Georgia Soil and Water Conservation has taken provisions of Act 599 and published a Manual for Erosion and Sediment Control in Georgia, 1992 Edition (or any more current edition as they are published). Final plans and specifications shall include appropriate segments of this manual.
   a. Developers, design professionals and contractors performing work in the City of Griffin are responsible for acquiring a copy of this manual and using the best practical methods contained therein to control the erosion and sedimentation of the construction site on conformance with the intent of ACT 599.
   b. Copies may be purchased from the Georgia Soil and Water Conservation Commission, P. O. Box 8024, Athens, GA 30603. For additional information, call the commission at 706-542-3065.

1703 E. Sanitary sewer details.

Special detail drawings made to a scale to clearly show the nature of the design shall be furnished to show the following particulars:

1. All stream crossings and storm drain outlets with elevations of the stream bed and of normal and extreme high and low water levels.
2. Details of special sanitary sewer joints and cross sections.
3. Details of special sanitary sewer appurtenances such as manholes, service connections, elevated sanitary sewers, piers, pipe bedding, special highway crossings, railroad crossings, drop manhole connections, etc.
4. Easement drawings shall be furnished for work outside the development prior to approval of the sanitary sewer plans. The drawings shall be of a size suitable for legal recording and shall be prepared by a registered land surveyor. The drawings shall be draw in accordance with this manual.

The title block for these easement plats shall read as follows:

CITY OF GRIFFIN
NAME OF OUTFALL OR SUBDIVISION
EASEMENT FOR PROPOSED SANITARY SEWER
CROSSING PROPERTY OF
John Doe
Tax Map, Block & Lot No./Zoning District/Date and/or Revised Date:

5. The developer's design professional shall furnish appropriate drawings for submittal by the owner to any state or federal highways, railroads, power lines, water lines, gas lines, petroleum lines or any other utility lines on which the sanitary sewer construction will encroach.
   - **a.** The drawings shall be 8½" X 11" or 8½" X 14" and shall show a plan view and profile view. The drawing shall show the same information required for easement drawings.
   - **b.** The drawing shall also show the right-of-way of the existing street or utility, the owner's designation of the line, the name or number of the nearest intersection or milepost or tower number and the distance to that appurtenance; clearance distance between the street surface, or the bottom of the rail, or the utility and the sanitary sewer; the type of material to be used for the sanitary sewer and the method of construction to be used; any other special information required by the owner of the facility on which the sanitary sewer is encroaching.
   - **c.** Five copies of the utility encroachment drawing will be furnished with the plans when they are submitted for approval.
   - **d.** The developer's design professional shall prepare and handle the submittal.
   - **e.** Construction permits shall not be issued until the utility encroachment permit has been obtained and until any special conditions such as insurance requirements have been complied with.
   - **f.** Sanitary sewer design calculations shall be submitted for all proposed mains as part of the development plans along with a sewer-shed map.
   - **g.** Deviations from the flow rates of table 17-1 shall be included in the submission of the development plan, with a description of the procedure used for the calculations and must be approved by the director of water and wastewater.
   - **h.** Sanitary sewer design calculations shall be submitted for all proposed mains as part of the development plans along with a sewer-shed map.

i. Deviations from the flow rates of table 17-1 shall be included in the submission of the development plan, with a description of the procedure used for the calculations and must be approved by the director of water and wastewater.

1703 F. As-built drawings.

At the completion of construction (and preferably prior to the final field inspection), "as-built" drawings of the project shall be submitted to the city to serve as a permanent record of the project and shall be furnished in the form of one set of Mylar sepias (or other suitable form of reproducible drawings), two sets of blue line copies and one CAD 14 disk. Acceptance by the city will be made only after satisfactory as-built drawings have been submitted. As-built drawings will be in the same format as the original construction plans and normally will be an updated version of the construction plans. Each sheet of these drawings shall bear words "as-built" or "record drawings".

GUIDELINES FOR PREPARATION OF AS-BUILTS

1. As-built drawings will be same format as the original construction plans.
2. Contour lines are not required.
3. Road names and lot numbers should be on plan.
4. "As-built" or "record drawing" is to be stamped in large clear print on plans.
5. Sheet should be no larger than 24" X 36".
6. Lateral wye locations must show distance from the downstream manhole. Ends of lateral lines must show distance from downstream manhole and offset distance from the main line. Approximate depth of end of lateral should be shown.
7. Show elevations of manhole inverts and tops.
8. Show field-measured distance between manholes.
9. For all sanitary sewers, show the field-measured azimuth or bearing of the line from manhole to manhole.
10. Show actual slope of pipe.
11. When a phase of a subdivision is completed, a location sketch of entire subdivision with said phase outlines shall appear on plans.
12. Maximum error of as-built measurements shall be:
    a. Manhole inverts measure to 0.01 feet with maximum vertical error of 0.50 feet per 1,000 feet of horizontal traverse.
    b. Manhole tops: measure to 0.10 feet with maximum vertical error of 0.50 feet per 1,000 feet of horizontal traverse.
    c. Horizontal locations: Measure to nearest 1.0 foot with allowable error of 1.0 foot per 1,000 feet of traverse.

1704. EASEMENTS

1704 A. All easements shall allow adequate room to construct the sanitary sewer and appurtenances. Permanent easements shall be a minimum of 20 feet wide, ten feet on each side of the line; except that when the depth of the sanitary sewer exceeds ten feet the required sanitary sewer easement width shall increase such that the easement width is at least twice the depth from the ground surface to bottom of the pipe. Easements with dual utilities shall be a minimum of 35 feet in width.

1704 B. To provide for maximum utilization of public sewer systems, appropriate easements shall be provided to adjacent properties for access to, or extension of, said utilities. Such easements shall be dedicated to the City of Griffin.

1704 C. It shall be the responsibility of the developer to obtain any off-site easements required to connect the project to existing public sanitary sewers. Easements will be conveyed to the City of Griffin for all facilities that are to be conveyed to the City. Final plans

cannot be approved until all necessary on-site and off-site sanitary sewer easements have been submitted, approved and recorded.

1705. SEWERS IN RELATION TO STREAMS, LAKES AND OTHER WATER BODIES

1705 A. Sewer lines crossing streams or standing bodies of water, both above and under water, present special problems, and should be discussed with the department of water and wastewater before final plans are prepared.

1705 B. Sewers located along streams shall be located outside of the streambed wherever possible and sufficiently removed there from to protect the natural stream channel. Reasons for requesting sewer lines to be located within streambeds shall be provided in the preliminary plan application.

1705 C. Stream buffer. Cross-country sanitary sewers adjacent to state waters shall be designed and constructed to comply with the buffer requirements as discussed in the City of Griffin soil and erosion control ordinance (copies are available at the public works department). Sanitary sewers crossing streams shall be kept to a practicable minimum. Where sewers parallel state waters, the sewers and their respective easements shall be located outside the buffer area.

1705 D. Sewers laid on piers across ravines or streams shall be allowed only when it can be demonstrated that no other practical alternative exists.

1706. SEWER SYSTEMS IN RELATION TO WATERWORKS STRUCTURES

1706 A. Sewer systems shall meet the requirements of the EPD and the local health department with respect to minimum distances from water supply wells or water supply sources and structures.

1706 B. No sewer line shall pass within 50 feet of a water supply source or structure unless special construction and/or pipe materials are used to obtain adequate protection.

1706 C. The proposed design shall identify and adequately address the protection of all water supply structures within 100 feet of the proposed project.

1707. DESIGN CALCULATIONS

1707 A. Sewer systems shall be designed to carry the peak flows generated by the estimated future population from all contributing points under consideration. The estimated average daily flow will be computed using the unit flows from table 17-1.

1707 B. Peak flows will be determined using table 17-2.

1707 C. Considerations will be given to domestic, commercial, institutional and industrial wastes plus groundwater infiltration in determining the necessary capacity of the sewer system.

Table 17. 1 Average daily wastewater flows by future land use category

Land Use Category	Density (SU/Ac.)	Unit*	Flow/Unit (gpd/Unit)
Residential:			
Low Density	2	DU	400
Medium Density	5	DU	375
High Density	9	DU	350
Neighborhood Commercial	—	Acre	2,000
Office/Professional	—	Acre	2,000
Commercial	—	Acre	2,000
Light Industrial	—	Acre	1,500

Office/Distribution/Technology	—	Acre	1,750
Heavy Industrial	—	Acre	2,000
Quasi-Public/Institutional/Churches	—	Acre	2,000
Public Land	—	Acre	**

Editor's note— *Acres refer to gross acreage minus the floodplain area as established.
Editor's note— **Design of sewer facilities to serve these land uses shall be on a case-by-case basis depending on specific uses.

1708. SANITARY SEWER DESIGN CRITERIA

1708 A. General.

The criteria listed herein is not intended to cover all aspects of design, but rather to mention the basic guidelines and those particulars that are required by the City of Griffin. For more detailed criteria, the design should refer to standard references such as "Ten States Standards", Georgia EPD rules, Water Pollution Control Federation Manual of Practice No. FD-5, and other available literature.

1708 B. Types of sanitary sewers.

All sanitary sewers for the conveyance of wastewater shall be designed as separate sanitary sewers in which groundwater, stormwater or other runoff from roofs, streets, parking lots, foundation drains and any source other than wastewater are excluded. Overflows from sanitary sewers shall not be permitted.

1708 C. Design period.

Gravity sanitary sewer pipelines should be designed in accordance with the city's wastewater management plan and should, as a minimum, be designed with capacity sufficient to handle the estimated tributary population 20 to 40 years into the future. Tributary population is considered to be all areas upstream of the discharge point of the system being designed as well as any anticipated pumped flow from other basins. Sanitary sewers shall be designed and installed to the uppermost property line of the development being served. Consideration should be given to the maximum anticipated capacity of institutions, industrial parks, etc.

1708 D. Capacity and size determinations.

In determining the required capacities of sanitary sewers, the following factors shall be considered:

1. Maximum hourly sewage flow;
2. Additional maximum sewage or waste flow from industrial plants;
3. Groundwater infiltration;
4. Topography of the area; and
5. Depth of excavation

New sanitary sewer systems shall be designed on the basis of an average daily flow of sewage of not less than 400 gallons per household per day. Normally, all sanitary sewers shall be designed for a peak flow of not less than 2.5 times the average flow; this peak factor will be higher for smaller basins. Sanitary sewers shall be designed to carry the peak flow when flowing at a depth of one-half the pipe diameter.

1708 E. Slope.

All sanitary sewers shall be so designed and constructed to give mean velocities, when flowing full of not less than two feet per second based on Manning's formula using an "n" value of 0.013. Table 7-2 below indicates the minimum slopes that should be provided; however, slopes greater than these are desirable:

Table 17. 2 Minimum required sewer pipe slopes

Minimum Sewer Size (inches)	Minimum Slope (ft/100ft.)
8	0.40
10	0.29
12	0.22
14	0.17
15	0.15
16	0.14
18	0.12
21	0.10
24	0.08
27	0.07
30	0.06
36	0.05

These minimum slopes shall be used only when sufficient flows are expected to maintain a velocity of two feet per second and maintain a cleaning action in the line. Sanitary sewers shall be laid with uniform slope between manholes. Sanitary sewers on 20 percent slopes or greater shall be ductile iron pipe and shall be anchored securely with concrete anchors (see standard details) to prevent displacement by erosion or shock. The maximum slopes of sanitary sewers shall be 30 percent and sanitary sewers shall be designed at less than 20 percent whenever possible.

1708 F. Increasing size.

When a small sanitary sewer is connected to a larger sewer, the connection shall not be lower than matching the top of both sewers to the same elevation.

1708 G. Gravity sanitary sewer pipe.

The city reserves the right to disallow any manufacturer that does not have a consistent, long-term record of quality control and successful product performance. Gravity sewer pipe up through 15-inch diameter will normally be polyvinyl chloride (PVD), solid wall type SDR26 thickens meeting ASTM D3034. Ductile iron pipe (DIP) shall be used where certain conditions exist (see discussion of DIP). For 18-inch diameter pipe and larger, the contractor may have the option of using either high density polyethylene (HDPE), PVC, reinforced concrete pipe (RCP), or DIP. The city may approve the other types of pipe on a case-by-case basis and may limit the options of type of pipe depending on site conditions. All buried PVC pipe shall be marked continuously with metalized locator wire. This should be addressed at the preliminary plan review stage.

1708 H. Sanitary sewer pipe bedding.

Bedding for sanitary sewer pipe shall be as follows (see also standard details):

1. For PVC, HDPE and any other pipe made of plastics or resins the minimum bedding shall be class "B".
2. For RCP and DIP pipe the minimum bedding shall be class "C".
3. In wet areas, the minimum bedding requirements will be increased as needed to ensure a stable support under, and on the sides of the pipe.

1708 I. Pre-cast concrete manholes.

1. *Manholes.* Sanitary sewer manholes shall consist of either pre-cast reinforced concrete sections with eccentric top section, or flat slab for shallow manholes, and a base section conforming to the typical manhole details as shown on the standard detail drawings. Flat top manholes will be approved only if a need for such can be demonstrated by the design professional during plan review.

2. *Manhole sections.* Pre-cast manhole sections shall be manufactured, tested, and marked in accordance with the latest provisions of ASTM Standard Specifications, Serial Designation C478.
3. *Manhole section joints.* Joints of the manhole sections shall be of the tongue and groove type. Sections shall be joined using preformed one-inch Butyl Rubber Sealant, equal to Kent Seal No. 2, AASHTO M-198 specifications.
4. *[Manhole joints.]* Manholes in areas where the water table reaches joints on the manhole will be required to have external joint sealants. Joints shall be sealed with a butyl-rubber based tape. The butyl component shall be 0.035 inches thick and contain two percent or less volatile matter. The backing component shall be EDPM rubber and shall be 0.045 inches thick.
5. *Lift holes.* Each section of the pre-cast manhole shall have no more than two holes for the purpose of handling. These holes shall be sealed before backfilling using either rubber plugs designed for this purpose, or with quick setting cement mortar.
6. *Manhole steps.* Manhole steps conforming to the applicable provisions of ASTM Specification C478, latest edition, shall be of #4 steel reinforcing bars covered with polypropylene plastic or rubber and shall be supplied with depth rings and other necessary appurtenances. See the standard detail for a typical manhole step detail.
7. *Pipe holes.* Holes in pre-cast bases to receive sanitary sewer pipe shall be pre-cast at the factory at the required locations and heights. Knocking out of holes in the field shall not be permitted on new construction. However, holes can be cored in the field with a coring machine. All manholes shall have Kor-N-Seal (or equal) rubber boots for all pipe entries/exits.
8. *Inverts.* Manhole inverts shall be constructed of 2,500 psi concrete in accordance with details on standard design drawings and the invert (flow channel) shall have the same cross-section as the sanitary sewers that it connects. The manhole bench and invert shall be carefully formed to the required size and grade by gradual and even changes in direction. Changes in direction of flow through the invert shall be made to a true curve with as large a radius as the size of the manhole will permit. Inverts shall have a "smooth trowel" finish. The manhole bench shall be sloped one-half-inch per foot from the manhole wall toward the invert.
9. *Manhole foundation.* The manhole base shall be set on a compacted mat of #57 size crushed stone. The mat shall be a minimum of six-inch thick and graded level. In wet areas the crushed stone mat shall be thickened as needed to provide a non-yielding foundation.
10. *Brickwork.* Any brickwork required to complete the pre-cast concrete manhole shall be constructed using one part Portland cement to two parts clean sand, meeting ASTM Specifications, Serial Designation C144, thoroughly mixed to a workable plastic mixture. All brickwork shall be constructed in a neat and workmanlike manner. Cement mortar shall be used to grout interior exposed brick joints and faces. No more than three courses of brick with nine-inch maximum total depth of bricks may be used to adjust manhole covers.
11. *Frame and cover.* The cast iron frame for the manhole cover shall be set at the required elevation and cast into the top section, except where adjustments in paved areas warrant detailed adjustments. Frames and covers shall be City of Griffin standard casting design (see standard drawings). The current approved ring and cover is embossed with the City of Griffin logo and is manufactured by East Jordan Ironworks. Where manholes are constructed in paved areas, the top surface of the frame and cover shall be tilted, if necessary, to conform to the exact slope, crown and grade of the existing adjacent pavement. In areas where manhole tops may be submerged by street runoff (such as manholes at low points in streets with curb and gutter) or high flood waters, the manhole lid shall be the bolt-down type. Bolt-down type covers shall be installed on all manholes not installed in the pavement. Gaskets used with bolt-down covers shall be of the O-ring type only.
12. *Masonry work.* Masonry work shall be allowed to set for a period of not less than 24 hours before being placed under traffic or in operation. All loose or waste material shall be removed from the interior of the manhole.
13. *Location.* Manholes shall be installed at the end of each line; all changes in grade, size or alignment; at all intersections; and at horizontal distances normally not greater than 400 feet. Cleanouts may only be used for special conditions and shall not be substituted for manholes

nor installed at the ends of laterals greater than 150 feet in length. Manholes in cross-country areas shall be elevated so that the top is 18 inches above ground.

14. *Drop manholes.* A drop pipe shall be provided for a sanitary sewer entering a manhole at an elevation of more than two feet above the manhole invert. The drop pipe shall be of ductile iron materials with mechanical joints. All outside 90-degree elbows shall have concrete support blocking poured below the elbow. Outside drop manholes will be noted on the construction plans any time the vertical drop exceeds two feet. Where the difference in elevation between the incoming sanitary sewer and the manhole invert is less than two feet, the invert shall be sloped from invert to prevent solids deposition.

1708 J. Steel casing pipe.

Steel casing pipe shall be used where boring and jacking of more than 20 feet in length is required for installation.

1. Steel casing pipe shall be schedule 40 thickness with minimum yield strength of 35,000 psi and shall conform to the requirements of ASTM A139. The pipe shall be fully coated on the exterior and interior with a coal tar coating. The pipe diameter shall be six to eight inches greater than the "bell" diameter of the carrier pipe.

2. Wherever steel casing is required, the carrier pipe shall be ductile iron pipe with push-on joints. Approved spacers made of stainless steel straps with nylon skids shall be used to center the carrier pipe; two spacers per section of pipe shall be used. A manhole shall be placed at each end of the cased section at a distance of five to ten feet beyond the end of the casing. Ductile iron pipe shall be continuous from manhole to manhole.

1708 K. Wastewater lift stations.

A registered professional engineer licensed in the State of Georgia shall do lift station design. The following minimum requirements apply to wastewater lift stations:

1. *General.*

a. Lift stations having less than 500 gpm capacity (per pump) shall utilize two submersible centrifugal pumps each having a capacity equal to the design flow. Lift stations having a capacity of 500 gpm or more shall be reviewed on an individual basis and may have requirements differing from those outlined herein.

b. Grinder type centrifugal pumps shall be used for pumps having a capacity of less than 100 gpm. Force mains shall be sized to provide a velocity of at least two feet per second.

c. The design shall allow for each removal of any pump or equipment item without the need to shutdown the entire lift station. Lift assembly shall be provided for pump or equipment removal.

d. The design engineer shall consult with the director of water and wastewater after preliminary design data has been developed for information on approved pump manufacturers. The city reserves the right to review each application on an individual basis and to reject the use of non-approved manufacturers.

2. *Plan and design submissions.*

a. In addition to the information requested in chapter 300, construction plans shall also include the following lift station information:

i. Capacity calculations. Use one gpm capacity per house for residential developments of less than 200 units, except that the minimum pump capacity must at least be 30 gpm.

ii. System head calculations; tabulated and plotted on the pump curve, along with a plot of force main velocity.

iii. Standard drawings, details and specifications sufficient to ascertain compliance with these regulations.

iv. Cycle time. Calculations showing determination of wet well volume and cycle time at design conditions. Wet well volume should be sufficient to provide a cycle time of no less than five minutes from a pump "on" to the next pump "on" time.

v. Storage volume. Calculations showing the volume of storage available in the event of a power outage. The storage zone shall be delineated on plan and profile drawings of the sanitary sewer system.

vi. Construction drawings and specifications in sufficient detail to ascertain compliance with these regulations.

vii. Buoyancy computations showing that structures are protected against flotation.

b. Shop drawings. After construction plan approval, but before purchasing any lift station equipment, shop drawings shall be submitted to the department of water and wastewater including the following information:

i. Manufacturer's catalog sheets, performance curves, installation drawings, specifications and list of options for the specific pump that is offered for approval.

ii. Similar catalog data for controls, valves, hatches, yard hydrants, pre-cast wet well and other manufactured items.

c. Certification. After installation and before placing the system into full operation, the work must be inspected by the developer's engineer who must then issue a certification to the department of water and wastewater verifying that all work has been done in accordance with approved plans. This certification shall include all construction of the lift stations and force mains. After acceptance of the work by the engineer, a factory representative shall inspect and start up the system certifying rotation, capacity, amperage draw, lack of vibration and other standard checks. This certification shall state the beginning date of the warranty and include a copy of the warranty. The pump shall have a minimum manufacturer's warranty of five years with no prorating.

d. Operation and maintenance manuals. On or before the date of start-up, five sets of factory O & M Manuals shall be delivered to the department of water and wastewater. These manuals shall include the name of the purchaser, the serial numbers of pumps, detailed wiring schematics, telephone number and address for purchase of parts.

e. After construction is complete as-built drawings shall be furnished including one set of Mylar sepias plus four sets of prints.

3. *Spare parts per manufacturer's recommendations.* Lift stations with pumps of five HP or smaller shall be supplied with a spare complete pump. Lift stations with pumps above five HP shall be supplied with an extra impeller and set of bearings plus a complete set of manufacturer's recommended spare parts.

4. *Standby power.* Each lift station shall be provided with a permanent in-place emergency generator for standby power. The only exception to this requirement is if the power supply in the project area of the city has a dual feed. Generators shall not be required where there is a dual feed. Where generators are required, the generator shall be diesel powers with an automatic transfer switch and provisions for an automatic exercise cycle. Specifications for the generator shall be submitted to the city for review and approval.

5. *Site requirements.*

a. *Flooding.* Lift stations shall be designed to remain fully operational and accessible during the 25-year flood event. All electrical controls shall be designed to be above the 100-year flood elevation. All motors and mechanical equipment shall be protected against physical damage from the 100-year flood.

b. *Access road.* Access roads shall be paved with a 12-foot wide surface of either concrete (four-inch thick with wire mesh) or asphalt (six-inch graded aggregated base plus two-inch Type E asphalt).

c. *Ownership.* Lift station sites and the access roads shall be dedicated to the city. The land dedicated for lift stations shall include sufficient space for parking of two trucks, plus turn-around and slope maintenance. The dedicated width for access roads shall be a minimum of 30 feet.

d. *Fencing.* Lift station sites shall be fenced with a minimum of six-foot high chain link fencing topped with three strands of barbed wire. Access gates shall be a minimum of 15 feet in width. The area inside the fencing shall be large enough to facilitate service vehicle access to the pumping station, wet sell, and other facilities. A paved turn-around area shall be provided whenever the access road length exceeds 200 feet or when the access road grade exceeds ten percent.

e. *Water supply.* A metered water supply line (three-fourths-inch minimum size) shall be installed to the site, and a freeze-proof yard hydrant located near the wet well. The hydrant shall be equipped with a suitable backflow preventer (Watts No. NF8 or approved equal). If city potable water is unavailable to the location of the lift station, a well may be supplied.

f. *Lighting.* One pole-mounted, 150-watt mercury vapor security light shall be installed. It shall be photocell controlled and equipped with a manual on/off switch (located in the main control panel) to override the photocell control.

g. *Screening.* Where natural screening is not present to screen the site from view of adjacent residences, special plantings shall be installed to screen the site.

h. *Ground covers.* All unpaved areas inside the fence and extending four feet beyond the fence, shall be treated with an herbicide and covered with a geotextile fabric. The fabric shall be covered with a four-inch thick layer of no. 57 stone. The geotextile fabric shall be a non-woven polypropylene weighing eight oz/S.Y. with a minimum burst strength of 250 psi, such as Amoco type 4553 or equal.

6. *Design features.*

a. *Wet well volume.* The wet well volume shall be sized to limit pump cycles to no more than six cycles per hour under worst conditions.

b. *Ventilation.* The minimum requirement for wet wells shall be two gravity vent pipes designed for natural ventilation. Vents shall be elevated to a minimum of two feet above the 100-year flood elevation. Where conditions are conducive to formation of hazardous conditions (in the design engineer's opinion), mechanical ventilation shall be provided. Mechanical ventilation shall be required for dry wells.

c. *Structures.* Submersible lift stations shall have a wet well structure and a separate valve pit. Both structures shall be pre-case concrete with a monolithic base. The valve pit shall be a minimum of 4' X 4' X 5' deep with manhole steps, floor drain pipe and a 3' X 3' lockable aluminum access hatch. Wet wells may be either round or rectangular and shall have a diameter or width of at least four feet. Wet wells shall be sized to meet cycle time requirements with a draw down (i.e. the distance between high water level and low water level) of not more than three feet. The wet well shall have a lockable aluminum hatch large enough for easy removal of pumps.

Riser sections in pre-cast units shall be sealed watertight using butyl rubber sealant or other approved sealant ("Ramnek", joint sealant or approved equal). The Butyl component shall be 0.035" thick and contain two percent or less volatile matter. Mastic shall not be used. Structures shall be adequately reinforced for all loading conditions normally encountered during shipping, construction and service. All openings (for pipes, hatch, conduits, etc.) shall be either case in place or cored. Sanitary sewer pipe connections shall utilize rubber boot connectors and be watertight.

d. *Accessories.* All materials inside the wet well and valve pit shall be corrosion resistant. Mechanical equipment requiring ferrous metals shall have a coal tar epoxy coating. Guide rails for pumps shall be stainless steel. Miscellaneous metals including fasteners shall be aluminum or stainless steel; anchor bolts shall be stainless steel.

e. *Pressure gauge.* A pressure gauge shall be installed on the force main downstream of the gate valves, inside the valve pit and visible from ground level. A corporation stop shall be installed on the tap to allow removal of the gauge.

f. *Valves.* The discharge pipe of each pump shall have a check valve followed by a gate valve before the two pipes join into a common force main.

g. *Surge control valves.* The pumping system shall be checked to determine if a surge control valve is required. If a valve is required, it shall be located within the valve pit on the common force main and a drain line installed to drain to the wet well.

7. *Pump features.*

a. Pumps shall have the following features:

i. Non-clog impeller;

ii. Be capable of passing a three-inch sphere (except grinder pumps);

iii. Be capable of dry operation without overheating;

iv. Have dual mechanical seals with seal leak indicator light in the control panel;

v. Pump and motor casings shall be cast iron, and all fasteners shall be stainless steel;

vi. Motor shall be selected to be non-overloading under all operating conditions;

vii. Motor winding shall have a heat sensor with auto reset to prevent overheating; three-phase motors shall have two sensors;

viii. The operating speed of the pump shall not exceed 1800 rpm without special approval;

ix. The motor shall have upper and lower roller bearings; and

x. The pump shall be automatically connected to the discharge connection elbow when lowered into place, and shall be easily removed for inspection or service. There shall be no need for personnel to enter pump well. A simple linear downward motion of the pump shall accomplish sealing of the pumping unit to the discharge connection elbow. Each pump shall be equipped with a chain (of aluminum or other non-corrosive material) for easy removal.

8. *Force main.*

a. The force main shall be sized for a minimum velocity of two feet per second with one pump operation.

b. Force mains of four-inch diameter or larger shall be ductile iron pipe (except for temporary installations where PVC pipe, SDR17, may be allowed for force mains of six-inch diameter or smaller). Force mains smaller than four inches may be used only with grinder pumps and shall be PVC pipe, SDR 17 with gasket joints. PVC pipe shall not be exposed to sunlight or freezing temperatures. Buried PVC pipe shall be marked continuously with metalized locator wire.

c. The force main profile shall slope continuously upward where practical. If high points occur where air could be trapped in the pipe, an air release valve (of the type made for sewage applications) shall be installed (in a manhole) at the high points.

d. The minimum depth of cover over force mains shall be four feet.

9. *Electrical.*

a. Lift station controls and electrical components shall be factory-wired in weatherproof stainless steel metal cabinets (NEMA 4X stainless steel). The cabinet shall be provided with condensate heaters. Spare fuses of each type used in the electrical/control system shall be furnished.

b. A main circuit breaker shall be installed that is designed to disconnect power to the entire station.

c. Three-phase power shall be provided for all motors exceeding five horsepower. Phase converters will not be allowed.

d. Protection against voltage surge and loss of a phase shall be provided.

e. The panel shall be equipped with a ground bus and neutral bus. The terminal shall be suitable for either aluminum or copper wire. All internal panel wiring shall be copper.

f. Motors shall be suitable for either 230 or 460-volt operation. The design engineer shall consult with the City of Griffin Electric Department to verify specifics pertaining to electrical power availability.

g. Four sealed float switches shall control the wet well level. All floats shall be provided with 25-feet of Type SJO flexible cord and shall be attached to a bracket mounted at the top of the wet well. Float functions shall be as follows:

i. Float no. 1 Low level (pumps off)

ii. Float no. 2 High level (lead pump on)

iii. Float no. 3 Extra high level (lag pump on)

iv. Float no. 4 Surcharge level (alarm activated)

h. The pump control system shall include the following features:

i. Lead pump/lag pump alternator;

ii. Alarm light and horn to indicate high water level;

iii. Seal failure indicating light;

iv. Pump failure indicating light;

v. Condensate heater;

vi. Lead pump selector switch;

vii. H-O-A switch and run light for each pump;

viii. Control voltage shall be 120V;

ix. The wiring shall be neatly tied and number coded to facilitate maintenance and a schematic diagram furnished with the panel;

x. A 120V GFCI type electrical receptacle shall be located at the control panel;

xi. Pump stations shall be equipped with a remote transmitting unit and telemeter circuitry connected to the city's SCADA system; and

xii. Manufacturer's warranties to be supplied with a minimum of 100 percent coverage for five years with no pro-rating.

i. *Warranty*. Regardless of the manufacturer's warranty terms, the developer will be responsible for all repairs necessary within two years from the date the station is completed and approved by the city. The developer will be required to furnish such assurances to the city as deemed appropriate by the city to ensure prompt action.

1709. SANITARY SEWER PIPE DESIGN CRITERIA

1709 A. Ductile iron pipe (DIP).

1. *Scope*. Ductile iron pipe shall be required at all utility crossings with less than two feet of clearance (above or below), in locations where cover is less than four feet, at stream crossings, where slopes exceed 20 percent, and where PVC sanitary sewer pipe has more than 16 feet of cover.

2. Ductile iron pipe shall be designed and manufactured in accordance with ANSI Specification A21.50 (AWWA C150-76) and ANSI Specification A21.51 (AWWA C151-76). Pipe shall be pressure Class 350.

Pipe shall be standard cement lined and seal coated with approved bituminous seal coat in accordance with ANSI Specification A21.4 (AWWA C104), latest revision.

Joints shall be push-on, or flanged joints for piping as called for or shown on the drawings and mechanical joint for fittings conforming to ANSI Specification A21.11 (AWWA C111), latest revision. Fittings shall meet the requirements of ANSI Specification A21.10. Gaskets for flange joints installed at aerial stream crossings shall be American Toruseal Flange Casket or approved equal.

1709 B. Polyvinyl chloride pipe (PVC).

1. *Scope*. The contractor shall provide unplasticized PVC gravity sanitary sewer pipe meeting the requirements of ASTM D3034, or latest revision, in the sizes shown unless otherwise indicated in the contract documents.

2. *Materials.* Pipe and fittings shall meet the requirements as specified under ASTM D3034, or latest revision, for pipe through 15 inches and ASTM F679 for pipe 18 inches through 27 inches. All pipe and fittings shall be suitable for use as a gravity sanitary sewer conduit. Bell joints shall consist of an integral wall section with elastomeric gasket joint that provides a watertight seal. The pipe shall be capably of passing all tests that are detailed in this specification. Minimum wall thickness shall be SDR26.

3. *Fittings.* All fittings and accessories shall be manufactured and furnished by the pipe supplier. They shall have bell and/or spigot configurations compatible with that of the pipe and shall have an equivalent wall thickness.

a. If Ductile Iron Pipe is required in a run between manholes then the entire section from manhole to manhole shall be DIP (no transitions).

4. *Pipe and fittings tests.* Before shipping any pipe, the manufacturer shall be approved by the city and shall furnish written certification that all pipe through 15 inches meets ASTM Specification D3034 and that pipe 18 inches through 27 inches meets ASTM F679. At least one sample from each 100 pieces of pipe furnished shall be subjected to each test outlined under section 8 of ASTM D3034. An independent laboratory approved by the city will test the

samples and a certified copy of results will be furnished to the city. If any test is not met then nine additional tests of that property will be ordered and if any of these nine tests are not met, the manufacturer will not be allowed to furnish materials for the project. No pipe shall be installed until the testing is complete and approved by the city.

a. *Pipe stiffness.* Minimum "pipe stiffness" (F/Y) at five percent deflection shall be 46 psi for all sizes, when tested in accordance with ASTM Standard Method of Test D2412 (latest edition), to determine the "External Loading Properties of Plastic Pipe by Parallel-Plate Loading". There shall be no evidence of splitting, cracking or breaking at a deflection of up to 30 percent of the original diameter.

5. *Fusion quality.* There shall be no evidence of flaking, swelling, or disintegration when the pipe material is tested in accordance with ASTM D2152, "Quality of Extruded Poly (vinyl chloride) pipe by Acetone Immersion".

6. *Joint tightness.* Pipe and fitting joints shall comply with ASTM D3212 (latest edition) for "Joints for Drain and Sanitary Sewer Plastic Pipes Using Flexible Elastomeric Seals". Joint assemblies shall not leak when subjected to both an internal and external hydrostatic test at equivalent pressures of 10.8 psi gauge for a period of one hour. Pipes shall be tested in straight alignment, axially deflected position, and by shear load test as otherwise defined in Paragraphs 7.2, 7.3 and 7.4 of ASTM D3212.

7. *Installation.* PVC pipe will be installed in accordance with ASTM D2321 (latest revision). Class "B" bedding is the minimum bedding requirement for PVC pipe. In any area where the pipe is below existing ground water level, the contractor will embed PVC pipe in sand or graded gravel must extend from six inches below the pipe to 12 inches above the pipe, and the material must be firmly placed under the pipe haunches. Initial backfill shall be compacted to the densities outlined in D2321. The city may require up to ten random compaction tests to insure compliance with D2321. If any material tested is less than the required density, the contractor shall re-compact said material and the city shall then have the right to additional compaction tests at the expense of the developer or his contractor to insure compliance with D2321.

8. *Deflection limit.* Vertical deflection of installed pipe shall not exceed five percent of the undeflected diameter as defined in table X1.1 of ASTM D3034. Upon completion of the pipe laying, and at least 30 days after installation (to allow for settling), the pipe will be tested for final acceptance. The contractor, pulling a mandrel of specified dimensions through the pipeline, shall perform the test.

9. *Locator wire.* All buried PVC pipe shall be marked continuously with metalized locator wire.

1709 C. Polyethylene pipe (HDPE).

1709 D. Scope.

This specification covers the requirements of high density polyethylene profile wall gravity sanitary sewer and drain pipe fittings in nominal sizes 18 through 96 inches with integral bell and spigot gasketed joints.

1. *Classes.* Class selection for high-density polyethylene profile wall sanitary sewer pipe shall be a minimum of Class 160 for pipe with zero feet to 18 feet of fill. Polyethylene pipe cannot be used over 18 feet deep.

2. *Material.* Pipes and fittings shall be manufactured from high-density polyethylene resin compound that shall meet the requirements of Type III, Class C, Category 5, Grade P34 in accordance with ASTM D1248. Materials meeting the requirements of ASTM D3350 with a cell classification of PE334433C or higher are also suitable. The pipe shall contain a minimum of 2% carbon black as an ultraviolet inhibitor.

3. *Pipe dimensions.* The average inside diameter and the minimum wall thickness of the waterway of the pipe shall comply with ASTM F894 for RSC Class 160 pipe.

4. *Joints.* The pipe shall be produced with bell and spigot end construction. Joining shall be accomplished by use of neoprene rubber gaskets complying with the physical requirements as specified in ASTM F477. Joints shall be in accordance with ASTM D3212 and withstand an internal operating pressure of 50 psi.

5. *Pipe stiffness.* The profile wall shall be substantially strong to protect against any diametrical deformation. All polyethylene profile wall pipe shall have a minimum specific pipe stiffness of

46 psi at a deflection of five percent of the internal diameter when tested and calculated in accordance with ASTM D2412 (latest edition).

6. *Retest and rejection.* If the results of any tests do not meet the requirements of these specifications, the tests may be conducted again in accordance with agreement between purchaser and seller. In retesting, the product requirements shall be met and the test methods designated in these specifications shall be followed. If upon retest failure occurs, the quantity of product represented by the tests shall be rejected.
7. *Deflection limit.* Vertical deflection of installed pipe shall not exceed five percent of the undeflected diameter as defined in table X1.1 of ASTM D3034. Each segment of line (except service lines) shall be tested at the end of each month just prior to submitting for payment on that segment. Upon completion of the pipe laying, and at least 30 days after installation (to allow for settling), the pipe will be tested again for final acceptance. The contractor, pulling a mandrel of specified dimensions through the pipeline, shall perform the test.
8. *Locator wire.* All buried PVC pipe shall be marked continuously with metalized locator wire.

1709 E. Reinforced concrete pipe (RCP).

1. *General.* The use of reinforced concrete pipe for sanitary sewers will be subject to approval on a case-by-case basis depending upon size of the sanitary sewer and site conditions. When approved for use, concrete gravity sanitary sewer pipe shall meet all materials and testing requirements of ASTM C-76, ASTM C-443 and ASTM C-497 (except where modified herein).
2. *Quality assurance.* The contractor must submit to the city the concrete pipe manufacturer's evidence of a working quality control program for approval, prior to any pipe being manufactured. The program and standards of manufacturing must be established and well defined. The program must include: a full time quality control technician, a complete and working quality control laboratory capable of testing and recording the requirements set forth in these specifications for concrete pipe, and a zero defect program for daily material testing and finished product testing to assure quality control as the pipe is being manufactured and shipped for this particular project.
3. *Guarantee.* The contractor shall provide a guarantee against defective materials and workmanship in accordance with the requirements of the section entitled "guarantees and warranties" of these specifications.
4. *Material.*
   a. All concrete pipe and fittings 12 inches in diameter and larger shall conform to the latest requirements of ASTM C076 with the following modifications: pipe with zero to 20 feet of fill shall be a minimum of Class III with 4500 psi concrete, pipe with 20 to 30 feet of fill shall be Class IV with 4500 psi concrete and pipe with 30 feet of fill or more shall be Class V with 5500 psi concrete.
   b. Pipe shall have circumferential reinforcement as required for the particular class of pipe furnished. The bell and spigot of the joint shall contain circumferential and longitudinal reinforcement. The pipe shall be centrifugally cast or vibrated, horizontally or vertically cast or made on a Packerhead machine and shall be furnished in lengths not more than 20 feet and not less than eight feet, except where short lengths are required for construction conditions. The pipe shall have bell and spigot joints suitable for the use of a rubber gasket to be provided as a part of this item.
   c. RCP shall have bell and spigot joints consisting of self-centering steel joint rings securely attached to the pipe reinforcing steel. The steel joint rings shall be suitable for use with a rubber O-ring gasket to be provided as part of this item. The joints shall have the joint rings securely attached to the pipe reinforcing steel. The rings that form the joint shall be made so that they will join with a close, sliding fit. The joint surfaces shall be such that the rubber gasket shall be confined on all sides and shall not support the weight of the pipe.

      The spigot ring shall have an external groove accurately sized to receive the gasket. Special section steel for spigot rings shall conform to ASTM A-283, Grade A, or ASTM A-306, Grade 50.

      The bell ring shall be flared to permit gradual deformation of the gasket when the joint is assembled. Minimum thickness of the bell rings shall be 3/16 inch. Bell rings ¼ inch or

thicker shall conform to ASTM A-283, Grade A, or ASTM A-306, Grade 50. Bell rings less than one-fourth inch shall conform to ASTM A-570, Grade A.

Each ring shall be precisely sized by expansion beyond the elastic limit of the steel and then gauged on an accurate template. A corrosion-resistant coating of zinc applied by an approved metalizing process after proper cleaning shall protect all exposed surfaces of both rings.

d. *Lining.* The coal tar epoxy system shall be Koppers 300 M, Porter Tarset, Wise Chem CTE 200, Amercoat 78, Protecto 101 or equal.

The interior concrete or mortar surfaces of pipe and fittings are to be sandblasted and painted with one coat of a high-build, coal tar epoxy system, or two coats of a standard coal tar epoxy system. The dry film thickness of the total system shall be 16 mils minimum on concrete or mortar surfaces and on steel joint ring surfaces.

Sandblasting shall result in a clean dry surface, free of oil, grease, and r other contaminants. Any air pockets over one-fourth-inch in diameter and one-eighth-inch deep appearing on the concrete surface after sandblasting will be filled with an epoxy sand patching material such as those sold by Sherwin-Williams, Glidden or Moran. The epoxy sand patch should be troweled prior to the application of the coal tar epoxy.

Any steel surfaces to be painted shall be sandblasted, solvent cleaned or wire brushed prior to painting. Application of the coal tar epoxy shall be by brush, roller or spray system using equipment recommended by the manufacturer of the coal tar epoxy system. The temperature during application and curing of the coal tar epoxy shall be as recommended by the manufacturer of the coal tar epoxy. Time between coats (if applicable) shall be as recommended by the manufacturer of the coal tar epoxy.

If the inside joint recess will be mortared and painted with coal tar epoxy in the field, the pipe supplier shall not paint the inside vertical surfaces at the ends of the pipe. When the inside joints will not be mortared in the field, the pipe supplier shall paint the inside vertical concrete or mortar surfaces at each end of the pipe.

The paint shall be extended continuously over the front lip of the steel spigot ring and a minimum of two inches onto the sealing surface of the unrestrained bell rings so that all interior joint surfaces that can be exposed to the fluid inside the pipe are coated.

1710. OTHER DESIGN REQUIREMENTS

1710 A. Distance between manholes.

Maximum distance between manholes shall be 400 feet.

1710 B. Depth.

Any sanitary sewers installed in the street shall be sufficiently deep to provide five feet of cover at the inlet end of all service laterals at the street right-of-way, and over any part of the main or service within the street right-of-way. Any sanitary sewers in off-street easements shall have a minimum of four feet of cover unless cast iron or ductile iron pipe is used. Filling over the pipe to obtain minimum cover is not allowed.

1710 C. Drop across manhole.

For manholes where the change in pipe horizontal direction (deflection) is less than 45 degrees, the normal pipe slope can be maintained across the manhole. Where the deflection is 45 degrees or more, a vertical drop across the manhole (between in and out pipes) of 0.1 feet is required.

1711. CONSTRUCTION METHODS

1711 A. Licensing and safety.

1. All contractors who work on sanitary sewer systems that will be owned by the City of Griffin must be licensed in accordance with State of Georgia law and local ordinance. Compliance with applicable safety regulations is the responsibility of each company

engaged in the work. The city assumes no responsibility for the actions of others on the job site. It is the responsibility of those installing sanitary sewers, lift stations and related appurtenances to conform to OSHA regulations, 29 CFR Part 1926, Subpart P, Paragraph 1926.650 through 1926.653. Publications from OSHA can be obtained by contacting OSHA Publications Distribution, Washington, D.C.

2. Contractors performing sanitary sewer system installations must be approved by the City and shall be required to be completely familiar with the procedures and contract requirements associated with this type project.
3. Unsatisfactory work may result in the loss of privilege to obtain a permit for future work in the City of Griffin.

1711 B. Construction permits.

1. No construction shall begin until the City of Griffin department of development services has issued all applicable permits. A pre-construction conference will be required prior to the commencement of construction.
2. The contractor shall submit one copy of the approved construction. The contractor shall furnish his name and address, telephone number, proof of his Georgia license to do this type of work, name of the person in charge of the project, list of any subcontractors and the name and telephone number of a responsible person who can be contacted in case of emergencies during nonworking hours.
3. The contractor (whose name shall appear on the approved contractor's list) shall furnish his construction schedule and shall notify the city 24 hours prior to beginning any work. Once the contractor begins work, he shall proceed in a workmanlike manner and shall complete the work in a reasonable time without undue off days and period of inactivity which make it hard for the city to keep up with his activity.

1711 C. Revisions to approved plans.

1. Any revisions to approved final plans that affect the approved site or subdivision plan, shall require formal city review and approval prior acceptance of the project by the city and issuance of any certificates of completion or occupancy. Revisions shall be submitted and process in accordance with Section 306.D of these regulations.
2. Any major changes to the approved system plans, not affecting the approved site or subdivision plans shall require the design engineer to submit revised drawings to the water and wastewater department prior to construction of the change. Such request shall include an explanation of the reason for the change. Any deviation from city's standards will be considered a major change, as will any change that will affect capacity, longevity, operation or maintenance of the facility. Any deviation from approved materials will be considered a major change.
3. Minor field changes may be made by the design engineer only with prior approval of the city and the changes documented in writing. The written documents must be submitted to the city water and wastewater department for review and approval.

1711 D. Trench excavations.

1. Sanitary sewer lines shall normally be installed by open-cut trench excavation. Trenches shall be cut true to the lines and grades shown on the approved plans. The bottom of the trench shall be cut carefully to the required grade of the pipe except where bedding materials or cradles are shown. In such cases the excavation shall extend to the bottom of the bedding or cradles as shown on the approved plans. Minimum pipe cover shall be as shown on the approved plans.
2. Bell holes shall be excavated at proper intervals so the barrel of the pipe will rest on the bottom of the trench for its entire length. Bell holes shall be large enough to permit proper installation of all joints in the pipe.
3. Pipe trenches shall not be excavated more than 100 feet in advance of pipe lying and all work shall be performed to cause the least possible inconvenience to the public. Adequate temporary bridges or crossings shall be constructed and maintained where required to permit uninterrupted vehicular and pedestrian traffic.
4. Excavations adjacent to existing or proposed buildings and structures, or in paved streets or alleys shall be adequately protected by the use of trench boxes, sheeting, shoring and

bracing to prevent cave-ins of the excavation, or the undermining or subsequent settlement of adjacent structures or pavements. Underpinning of adjacent structures shall be done when necessary to maintain structures in safe condition.

1711 E. Installation of sanitary sewer pipe.

1. Construction stakeout shall be required prior to construction of sanitary sewer lines. As a minimum, the horizontal alignment will be staked at 100-foot intervals and each manhole will be located with a centerline stake and two offset hubs. "Cuts" to invert elevations will be shown for each manhole entry and exit pipe. A copy of the stakeout notes will be provided to the water and wastewater department.
2. Pipe and accessories shall be handled with care at all times to avoid damage. Whether moved by hand, skidways or hoists, material shall not be dropped or bumped. The interior of all pipes shall be kept free from dirt and foreign matter at all times. Each joint of pipe shall be unloaded opposite or near the place where it is to be laid in the trench.
3. All defective or damaged material shall be removed from the job site.
4. The preferred order of construction is to connect to existing sanitary sewers after all other construction is complete and conditionally accepted by the city. Connection to existing sanitary sewers can be done at the beginning of construction, however, the new main shall be plugged where it entered either the existing manhole or the new doghouse manhole over an existing sanitary sewer and the plug shall remain in-place until the project is conditionally accepted.
5. Sanitary sewer pipes shall be jointed by "push-on" joints using elastomeric gaskets to affect the pressure seal. The ends of pipe to be joined and the gaskets shall be cleaned immediately before assembly and the assembly shall be made as recommended by the pipe manufacturer. Lubricant used must be non-toxic and supplied or approved for use by the pipe manufacturer. Sanitary sewer pipes shall be laid in the uphill direction with the bells pointing upgrade. Any variation from this procedure shall require approval from the city.
6. Bell holes shall be provided of sufficient size to allow ample room for making the pipe joints without putting any load on the bell of the pipe. The bottom of the trench between bell holes shall be carefully graded so the pipe barrel will rest on a solid foundation for its entire length as shown on the plans. Each joint shall be laid so it will form a close concentric joint with adjoining pipe and in order to avoid sudden offsets or inequalities in the flow line.
7. When pipe is not actively being laid, the open ends of installed pipe shall be plugged with a watertight plug to prevent entrance of trench water into the line.
8. Bedding for pipe shall normally be as follows (also see standard details):
   a. For PVC, H.D.P.E. and any other pipe made of plastics or resins the minimum bedding shall be class "B".
   b. For concrete and ductile iron pipe, the minimum bedding shall be class "C".
   c. In wet areas, the minimum bedding requirements will be increased as required to ensure a stable support under the pipe and on the sides of the pipe.
9. Trench backfilling. Backfill material up to 12 inches above the top of the pipe shall be compacted dry, loose, soil. If such material is not available from the site, no. 57 stone shall be used to backfill up to 12 inches above the top of the pipe. Backfilling the remainder of the trench may utilize soil and blasted rock (not over 24 inches in any dimension) compacted sufficiently to avoid excessive settlement. Under no circumstances will tree parts, vegetation, building materials or any other type of debris be used for backfill.
10. Backfill compaction. All backfill beneath roads, sidewalks or other critical areas shall be compacted to 95 percent Standard Proctor or as otherwise required by the DOT or other such agency having jurisdiction. The compaction shall be done using mechanical tamping equipment in six-inch lifts. Moisture control of the backfill material and/or hauling in of select material may be required to achieve this compaction percentage. Compaction testing and certification by an independent soil testing company will be required in these areas. The test results shall be submitted for review to the director of water and wastewater.

1711 F. Railroad crossings.

All railroad crossings shall conform to the requirements of the American Railway Engineering Association Manual for Railway Engineering, Part 5. The contractor shall

secure permission from the railroad to schedule the work so as not to interfere with the operation of the railroads. The contractor shall be held responsible for any delays or damages occurring to the railroads. The contractor shall furnish the railroad with such additional insurance as may be required, cost of the insurance shall be borne by the contractor, together with the costs for flagmen, watchmen, temporary work of any nature, safety devices and any other items that may be required by the railroad.

1711 G. Highway crossings.

All construction work in a state highway right-of-way shall be approved by the Georgia DOT.

1711 H. Stream crossings.

1. The preferred method for crossing rivers, streams, creeks, impoundments or wet weather ditches is with a minimum of six inches of cover between the lowest point in the stream and the top outside diameter of the pipe. Ductile iron pipe is required for all stream crossings and shall extend a minimum of ten feet beyond the top of bank on each side. Concrete collars or encasement must be provided at all joints for ductile iron pipe with less than three feet of cover.
2. The stream bed and sides at the crossing point shall be protected from erosion with the use of rip-rap, as defined and sized in the Manual for Erosion and Sediment Control in Georgia, Appendix C—Construction Materials, 1992 or most current condition.
3. Aerial crossings will require detailed plans and will be allowed only when, in the city's opinion, there is no reasonable alternative.
4. Erosion control measures shall be installed prior to installing pipe across any stream. All work should be performed when stream flows are at their lowest, and as quickly and safely as possible. As soon as conditions permit, the streambed shall be cleared of all false-work, debris, and other obstructions placed therein or caused by the construction operations.
5. Erosion control measures can include, but not be limited to, the following items: type A, B, and/or C silt fencing, erosion control beck dams, channel diversion through temporary storm drain pipe, rock filter dams. The construction and installation of these various structures are detailed in the Manual for Erosion and Sedimentation Control in Georgia or the Georgia DOT Standards and Construction Details.

1711 I. Casing for sanitary sewers.

1. Where pipe is required to be installed under railroads, highways, streets or other facilities by jacking or boring methods, construction shall be done in a manner that will not interfere with the operation of the facility, and shall not weaken the roadbed or structure.
2. The diameter of the bore shall conform to the outside diameter and circumference of the casing pipe as closely as practicable. Any voids that develop during the installation operation shall be pressure grouted. Each segment of the casing pipe shall be welded (full circumference butt weld) to the adjoining segment. The completed casing shall have no sags or crowns that cause the grade for any segment to be less than the minimum slope for the size pipe being installed.
3. The carrier pipe shall be fitted with approved spacers to secure its position within the casing. The void at each end of the casing pipe, between the carrier pipe and casing, shall be sealed with brick and mortar.

1711 J. Replacement of pavement.

The contractor shall fully restore and replace all pavement, curbs, gutters, sidewalks and other surface structures removed or disturbed by the construction, to a condition that is equal to or better than the original condition in a manner satisfactory to the city (see standard details).

1711 K. Location/protection of existing underground utilities.

It shall be the responsibility of the contractor to locate and protect all underground utilities. The contractor, at his own expense, shall repair utility lines or services damaged by the contractor.

1711 L. Protection of water supply and other utilities.

1. The city has an established cross-connection program (1985) to prevent the entry of contaminants of pollutants into any area of the potable water supply. Therefore, it is illegal to introduce any substance into, or to have any cross connections with, the potable water supply. There shall be no physical connection between a public or private potable water supply system and a sanitary sewer that permits the passage of any sewage or polluted water into the potable water supply.
2. Whenever possible, sanitary sewers shall be laid at least ten feet distance horizontally from any existing or proposed water main. Should conditions prevent this separation, the lines shall be laid in separate trenches and the sanitary sewers shall be ductile iron. In either case, the elevation of the crown of the sanitary sewer shall be at least 18 inches below the invert of the water main.
3. When sanitary sewers cross under water mains, the sanitary sewer shall be laid so the top of the sanitary sewer is at least 18 inches below the bottom of the water main. If conditions prevent this minimum vertical separation, the sanitary sewer shall be ductile iron and shall be encased in concrete.

1711 M. Sanitary sewer services.

1. A sanitary sewer service shall be provided for every existing or proposed lot or building. All services shall be shown on the construction and as-built drawings. A common service shall not be allowed for two or more buildings. The service shall extend to the property line of the lot being served and shall normally be within ten feet of the lower corner of the lot. Each service shall have a six-inch cleanout installed as shown in the standard details. Services shall be locatable from main to cleanout.
2. The developer shall be responsible for serving all lots developed. On any lot where the service cannot be found, the developer shall be responsible for payment of the cost of installation of a new service. Also, unless noted on the final plat, the service shall be located low enough to serve the first floor elevation at the building line.
3. The builder shall be responsible for the location of the service prior to the pouring of the foundation, driveway or other appurtenance. The city will not be responsible for any house built too low to be served, nor for any service made inaccessible.
4. No plumber or contractor will be allowed to connect to the sanitary sewerage system except at the end of the service provided for this connection. Also, any service provided will be utilized without the installation of additional services.

1711 N. Clean-up.

1. Prior to requesting the "completion of sanitary sewer construction" inspection, the contractor shall remove and dispose of in an acceptable manner all shipping timbers, shipping bands, spacers, excess materials, broken material, crates, boxes and any other material brought to the job site.
2. Any work areas, within the public right-of-way or on private property outside of the development, that were damaged by the sanitary sewer construction shall be repaired or replaced with the same kind of material as existed prior to the damage occurring. All easement areas shall be completely cleared of trees, stumps and other debris and left in a condition such that the easement can be maintained by bush-hog equipment.
3. All shoulders, ditches, culverts and other areas disturbed by the sanitary sewer construction shall be brought to the proper grades and left smooth in appearance.
4. All manhole covers shall be brought to grade.
5. A uniform stand of grass or mulch for erosion protection, as defined in the Manual for Erosion and Sediment Control in Georgia, is required over all construction easements and sanitary sewer easements prior to the city's acceptance of the sanitary sewer.

6. Streets, sidewalks, landscaping and other public and private property disturbed in the course of the work shall be restored as near to original condition as possible or better in a manner satisfactory to the city.
7. Trenches shall be kept free of water by pumping or well pointing, as determined by the contractor. No structure shall be built, or pipe shall be laid, in water. Water shall not be allowed to flow over or rise upon any concrete, masonry or pipe until the same has been inspected and the concrete or joint material has thoroughly set. All water pumped, bailed, or otherwise removed from the trench or other excavation shall be conveyed in a proper manner to a suitable place of discharge. Such discharge shall not cause injury to public health, property, work completed, work in progress or to any street surface, or cause any interference with the use of it by the public.
   a. Construction occurring around active sanitary sewer systems shall be done in such a way so as to prevent the spillage of wastewater.
8. All excavations shall be adequately guarded with barricades and lights in compliance with all OSHA and Georgia DOT requirements so as to protect the public and workers from hazard.

1711 O. Rock excavation.

1. Drilling and blasting operations shall be conducted with due regard for the safety of persons and property in the vicinity and in strict conformity with requirements of all ordinances, laws and regulations governing blasting and the use of explosives. Rock excavation near existing pipelines or other structures shall be conducted with maximum care to avoid damage to the pipelines or structures. The contractor shall promptly repair all injury or damage to other structures and properties to the satisfaction of the city and property owner.
2. Rock in trenches shall be excavated over the horizontal limits of excavation and to depths as shown in table 7-3 below:

Table 17. 3 Trench excavation depths

Size of Pipeline (inches)	Depth of Excavation Below Bottom of Sewer Pipe (inches)
4 or less	4
4 to 6	6
8 to 18	8
20 to 30	10
Over 30	12

3. The undercut space shall then be brought up to grade by backfilling with Size #57 crushed stone material or approved equal.

1712. INSPECTION OF SANITARY SEWERS

1712 A. Responsibility for inspection.

1. The developer's contractor is responsible for the quality, accuracy and workmanship of his completed work. In addition, the developer shall employ a qualified professional (this shall normally be the same design professional who prepared the plans for the work) to review the quality of work as required during construction and to oversee the various tests and inspections specified herein. The professional shall demonstrate to the city that he is qualified to perform the inspections and meets state licensure requirements applicable to the profession or practice he is engaged in.
2. City personnel will visit the job site on a periodic basis and will make spot checks, as they deem appropriate. The city shall have the right to review and inspect all construction and may reject any work that does not meet quality control standards.

1712 B. Access to project.

Authorized representatives of the city that may include, but is not limited to, city employees, city consultants, state or federal agencies shall have access to the site for inspection at any time.

1712 C. Communications during construction.

1. All written communications regarding sanitary sewer construction shall be directed to:

   Director of Water & Wastewater
   City of Griffin
   P. O. Box T
   Griffin, GA 30224
   Phone 770-229-6424—Fax 770-229-6439

2. The developer, contractor(s) and the developer's professional responsible for inspection will be required to attend a pre-construction conference with the city. At the pre-construction conference, the contractor will submit to the city, in writing, the date they propose to begin construction. The contractor shall provide notification by phone any time the work is to be vacated and will provide notice by phone prior to resuming work.
3. The city inspector may have informal verbal communications with the contractor, foreman or superintendent at any time during construction. The city inspector will not direct the actions of the contractor's workmen.

1712 D. Concealed work.

The city inspector may direct that the contractor notify the city and receive inspection approval prior to concealing certain work such as manhole foundations, pipe bedding, wyes, bends, service laterals or other appurtenances.

1712 E. Minimum required inspections.

The following inspections shall be the minimum to be performed and certified in writing by the professional employed by the developer for quality control checking of the construction work:

1. *Horizontal location.* Measuring "as-built" distances between manholes and bearings from manhole to manhole to check horizontal location of the line.
2. *Elevation and slope.* Elevation of each invert and top of manhole shall be measured and recorded. Actual pipe slope shall be computed and any segment having less than minimum allowable slope shall be rejected and redone.
3. *Manhole construction.* Every manhole shall be visually inspected to check for plugging of lift holes, use of connection boots, use of joint material, leakage, proper invert construction, and the proper setting of frame and cover.
4. *Pipe straightness.* Every section of sanitary sewer line shall be visually checked for straightness. For a section to pass must show at least 80 percent of a full circle when observed from one end. Any section that fails this visual test shall have water run through it sufficient to fill any sag that may exist. It shall also have a television camera pulled through it to check for sags. Any sag holding more than 1½ inches of water shall require the pipe be removed and replaced to proper grade. Following the replacement, the section shall be televised again to verify correction.
5. *Infiltration.* The allowable limit of infiltration, for any section from manhole to manhole, shall be 25 gallons per day per inch of pipe diameter per mile of pipe. If any infiltration is present at the most downstream point, then it will be measured using a specially made weir and measurements also made at each upstream manhole that has any visible flow of water. Any individual segment that exceeds the allowable infiltration shall be corrected to within allowable limits.
6. *Compaction of backfill.* Compaction testing shall be required for construction in paved areas or where pavement is planned. A minimum of five tests per 1,000 feet of sanitary sewer shall be conducted at varying depths. If any of these tests show failing results, the failing backfill shall be removed, re-compacted and re-tested, and one additional area shall also be tested.

1712 F. Additional testing requirements.

The contractor shall also perform the tests listed below during the presence of the developer's professional. The city must be notified at least two days prior to these tests being conducted to afford the city the opportunity to be present.

1. *Mandrel test for gravity sanitary sewer PVC pipe.* The procedure for testing PVC sanitary sewer pipe for maximum allowable deflection shall be generally as follows (see ASTM specs for mandrel dimensions and more detail):
   a. Completely flush the line making sure the pipe is clean of any mud or trash that would hinder the passage of the mandrel. During the final flushing of the line, attach a floating block or ball to the end of the mandrel pull rope and float the rope through the line (a nylon ski rope is recommended). After the rope is threaded through the line, connect the pull rope to the mandrel and place the mandrel in the entrance of the pipe. Connect a second rope to the back of the mandrel. This will enable the mandrel to be retrieved if excessive deflection is encountered. Draw the mandrel through the sanitary sewer line. An increasing resistance to pull is an indication of excessive deflection. If this occurs mark the rope to note the location. Televise the sanitary sewer section to identify the extent of the problem and develop a plan, subject to city approval, for correcting the problem. A retest shall then be undertaken.
2. *Air pressure test.* The contractor, to check for leaks, shall conduct a low-pressure test of each gravity sanitary sewer line section. The following general procedures will apply (also refer to ASTM specs):
   a. Temporarily plug the line segment between two manholes using plugs with airtight fittings through which low-pressure air can be introduced into the pipe segment being tested. Introduce low-pressure air into the test pipe segment until the internal air pressure reaches 4.5 psig above ground water pressure, if any. Wait at least five minutes for air temperature in the test segment to stabilize while internal air pressure remains at least 3.5 psig above ground water pressure. Bleed internal air pressure to exactly 3.5 psig above ground water pressure. Accurately determine the elapsed time for the internal pressure to drop to 2.5 psig above ground water pressure. The air test is acceptable is elapsed time is no less than shown on table 7-4 below.
   b. Excessive leakage shall be permanently corrected and the test repeated until the developer's professional witnesses a successful test on each line segment.
   c. Note: Upon request, the city may allow substitution of an exfiltration test in lieu of the air pressure test. If used, the exfiltration test shall be conducted with a minimum water head of two feet above the groundwater table and the allowable exfiltration shall be limited to 25 gallons per day per inch diameter of pipe per mile of pipe.

Table 17. 4 Air pressure test maximum acceptable limits

Pipe Diameter (inches)	Seconds Per 100 ft. of Pipe	Pipe Diameter (inches)	Seconds Per 100 ft. of Pipe
4	11	27	77
6	17	30	85
8	23	36	102
10	28	42	119
12	34	48	136
15	43	54	153
18	51	60	170
21	60	66	187
24	68	72	204

3. *Inspections.* Sewer mains are to be television inspected under flow conditions to verify accuracy of slope, alignment displacement of gaskets and cleanliness of the pipe. Two copies of the video inspection are to be submitted to the City of Griffin and must include a written log report of the testing sequence and conditions.
4. *Damp pipe required.* Air leakage time is based on the pipe being damp. If pipe and joints are dry, dampen line if helpful in meeting air test time requirement.
5. *Force main pressure testing.* Before applying the specified test pressure, all air shall be expelled from the pipe. All pipe laid in trenches shall be backfilled adequately to secure the pipe during the test. Any observed leakage shall require corrective measures to pipe lines and/or joints as otherwise provided for in these specifications and to the satisfaction of the city. The city will furnish the necessary water for testing the force main. However, any water lost through breakage of lines or unnecessary or excessive flushing of the line shall be charged to the developer. The force main must be flushed and tested at a pressure of 200

psi for six hours. When testing at the specified pressures, the rate of leakage shall not exceed 25 gallons per 24 hours per inch diameter per mile of line (see table 7-5 below). If the force main does not meet this test, the leaks shall be found and corrected at once and re-tested until the leakage falls within the limits specified.

6. *Vacuum testing manholes.*

a. Manholes shall be tested before the ring and cover and grade adjustment rings are installed, and after backfill and compaction is complete.

b. Conduct tests in conformance with ASTM C1244 and these specifications.

c. Preparation for tests:

i. All lift holes, joints and other imperfections shall be filled with an approved non-shrink grout, to provide a smooth finish appearance.

ii. All pipes entering the manhole shall be temporarily plugged, taking care to securely brace the pipes and plugs to prevent them from being drawn into the manholes.

d. Test procedures:

i. The test head shall be placed at the top of the manhole in accordance with the manufacturer's recommendation.

ii. A vacuum of ten inches mercury shall be drawn in the manhole, the valve on the vacuum line of the test head closed, and the vacuum pump shut off.

iii. The time shall be measured for the vacuum drop to nine inches mercury.

iv. The manhole shall pass if the time for the vacuum reading to drop from 10 inches mercury to nine inches mercury meets or exceeds the values indicated in the following table:

Table 17. 5 Maximum test times for various manhole diameters (inches)

Time (sec)	Depth[1]		
	48 ft	60 ft	72 ft
8	20	26	33
10	25	33	41
12	30	39	49
14	35	46	57
16	40	52	67
18	45	59	73
20	50	65	81
22	55	72	89
24	59	78	97
26	64	85	105
28	69	91	113
30	74	98	121

[1] Round actual depth of manhole to next depth up (ex. 11-foot deep manhole, use depth of 10 feet).

v. If the manhole fails any test, necessary repairs shall be made by an approved method and the manhole shall be retested until a satisfactory test is obtained.

Table 17. 6 Maximum acceptable water leakage

Size of Pipe (inches)	Gallons Per Hour Per 100 Feet	Gallons Per Day Per 100 Feet
14	0.276	6.624
12	0.237	5.688
10	0.197	4.728
8	0.158	3.792
6	0.118	2.832
4	0.079	1.896

1712 G. Final inspection and conditional acceptance.

1. No buildings or plumbing fixtures shall be connected to the sanitary sewers until inspected and approved by the city.
2. The professional responsible for inspection of the construction shall provide the city with an engineering statement after he completes his inspection, testing and submittal of as-built drawings and easements. This statement must certify that all specified inspections and tests have been made and successfully passed, and that the work has been completed in substantial accordance with the approved plans and specifications. After receipt of this statement, the city will schedule a final inspection. A representative of the developer's professional and the contractor shall be present during this final inspection.
3. After any discrepancies are corrected, the city will issue a letter certifying conditional acceptance of the system. This letter shall commence the start of the 24-month warranty period that is required of the contractor.
4. At the end of the warranty period, the subdivision inspection team will again inspect the entire development. When all discrepancies have been corrected, the city will issue an acceptance letter and will begin perpetual maintenance and operation of the system.

1712 H. Maintenance and payment bond.

The developer shall post a maintenance bond on the facility, in accordance with section 312.6 of these regulations, for a two-year period after completion and conditional acceptance of the facility by the city. In addition, the developer shall post a payment bond on the facility for all subcontractor and material supplier work.

1712 I. Maintenance until final acceptance.

It shall be the developer's obligation to provide all maintenance for a two-year period after conditional acceptance of the project by the city. At the end of the maintenance period the city shall inspect the sewer system, and upon correction by the developer of all deficiencies noted by the city, the city will accept the system for operation.

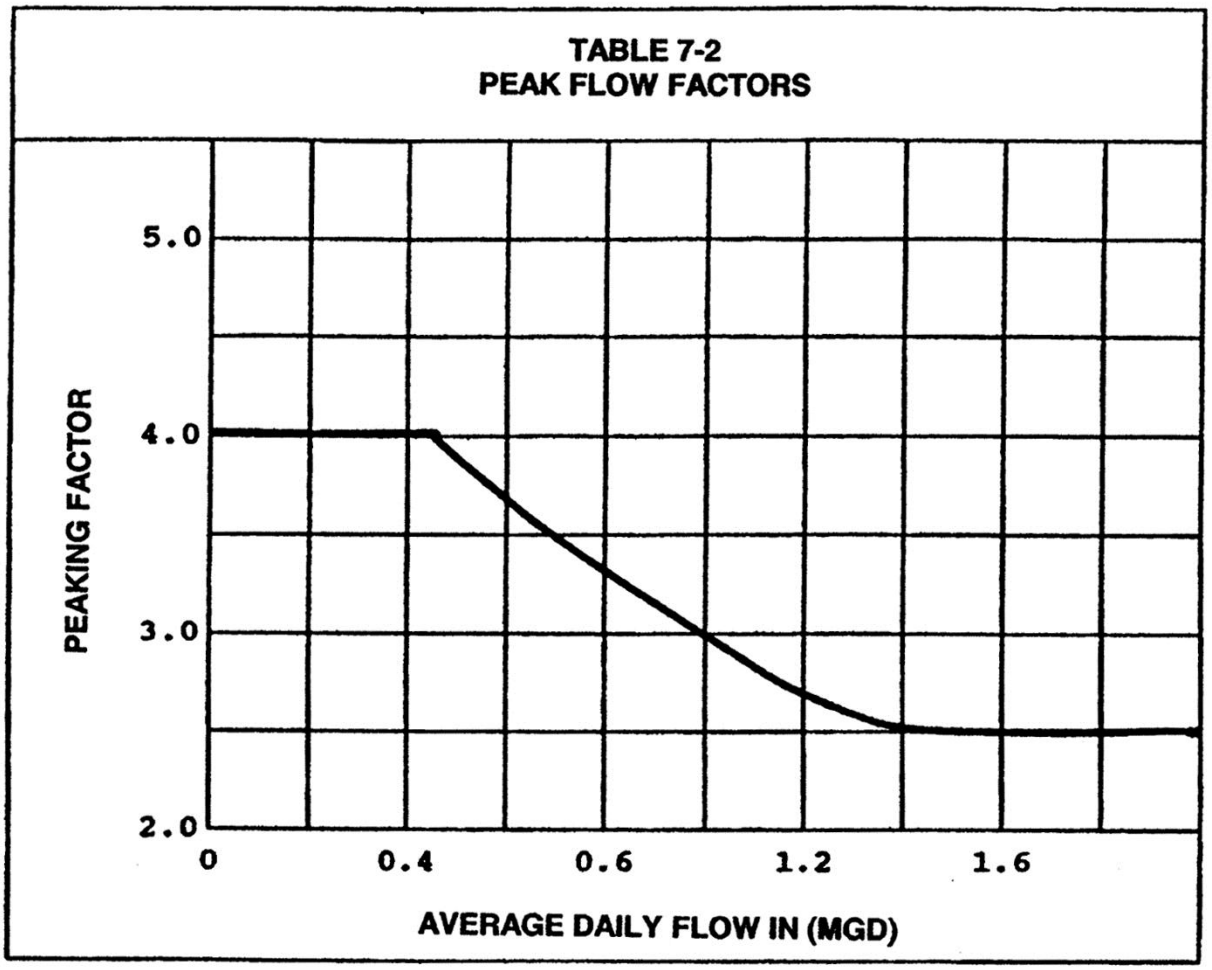

17. 1 PEAK FLOW FACTORS

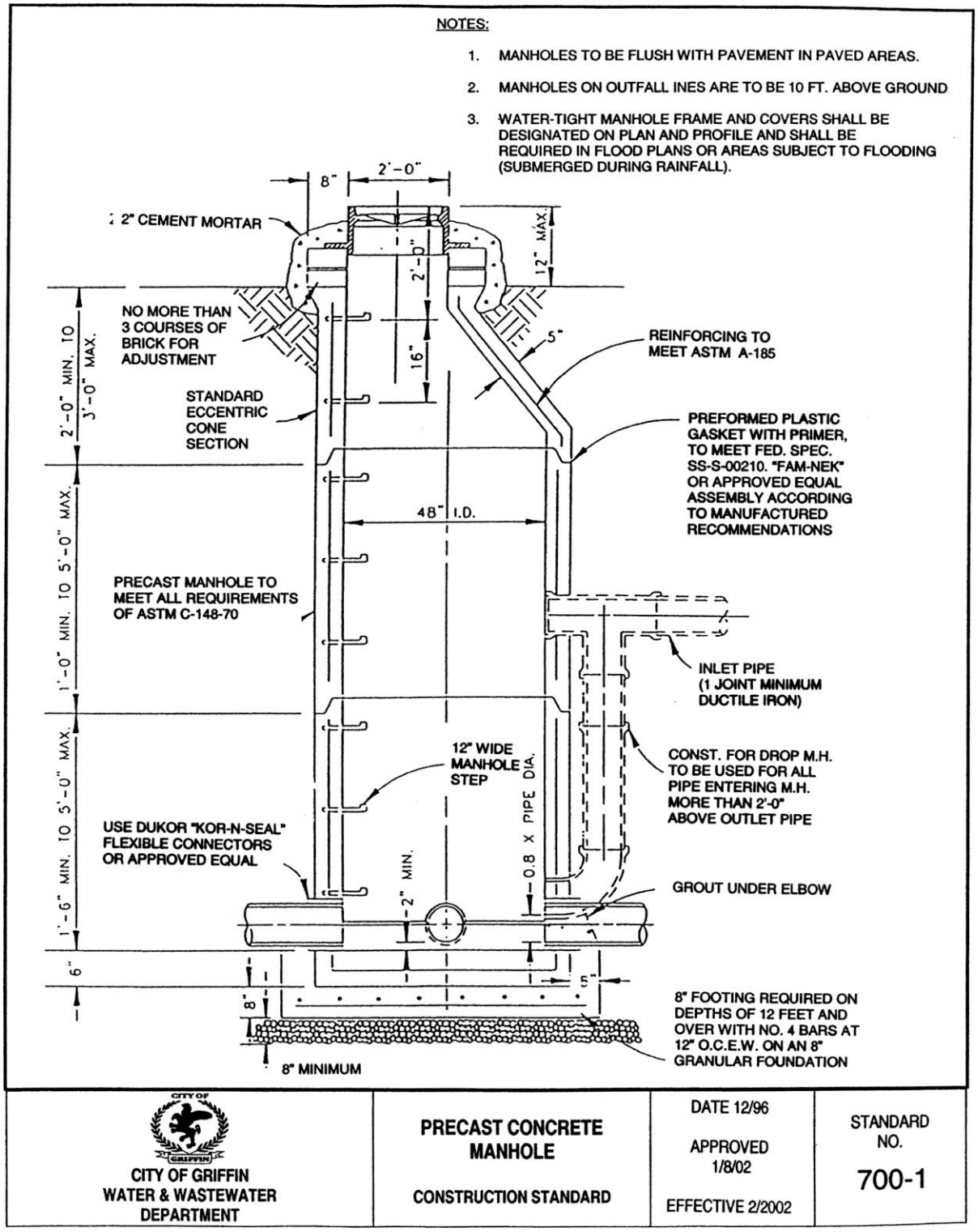

17. 2 PRECAST CONCRETE MANHOLE

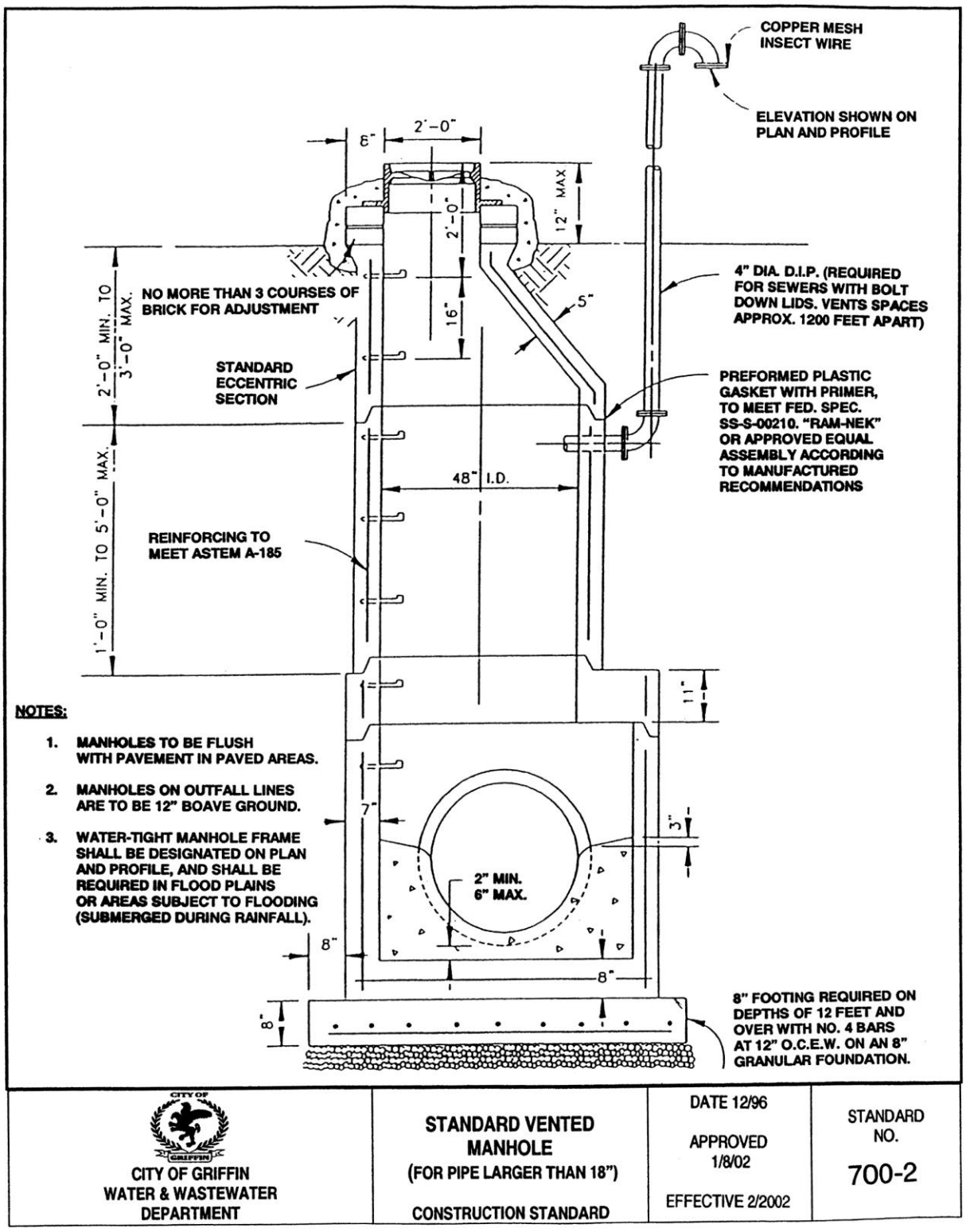

17. 3 STANDARD VENTED MANHOLE (FOR PIPE LARGER THAN 18")

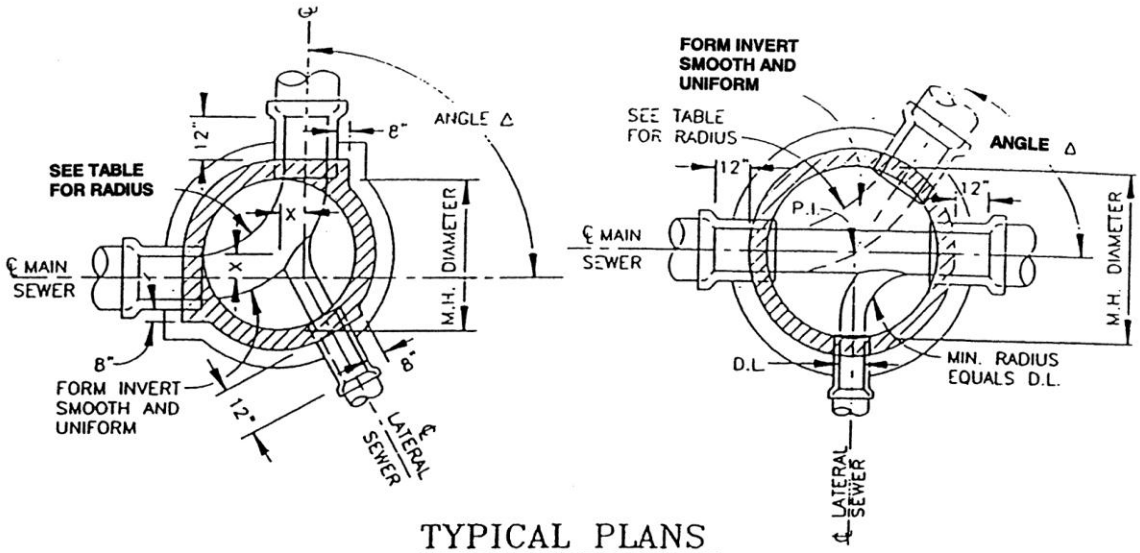

TYPICAL PLANS

STANDARD MANHOLE

STANDARD MANHOLE
SCHEDULE OF GOVERNING DIMENSIONS

PIPE SIZE	ANGLE Δ	MANHOLE DIAMETER	"R"	"X"
8" TO 18"	0° TO 90°	4'-0"	2'-0"	0"
21" & 24"	0° TO 60°	4'-0"	2'-0"	6"
21" & 24"	60° TO 70°	5'-0"	2'-0"	6"
21" & 24"	70° TO 80°	5'-0"	2'-0"	7- 1/2"
21" & 24"	80° TO 90°	5'-0"	2'-0"	10- 1/2"
30" & 36"	0° TO 60°	5'-0"	3'-0"	8"
30" & 36"	60° TO 70°	6'-0"	3'-0"	10"
30" & 36"	70° TO 80°	6'-0"	3'-0"	13"
30" & 36"	80° TO 90°	6'-0"	3'-0"	16"
42"	0° TO 35°	6'-0"	3'-0"	3"
42"	35° TO 50°	6'-0"	6'-0"	6"
42"	50° TO 90°	7'-0"	6'-0"	0"
48" & 54"	0° TO 35°	6'-0" & 7'-0"	6'-0"	0"
48" & 54"	35° TO 90°	8'-0"	6'-0"	0"

CITY OF GRIFFIN WATER & WASTEWATER DEPARTMENT	STANDARD MANHOLE PLANS CONSTRUCTION STANDARD	DATE 12/96 APPROVED 1/8/02 EFFECTIVE 2/2002	STANDARD NO. 700-3

17. 4 STANDARD MANHOLE PLANS

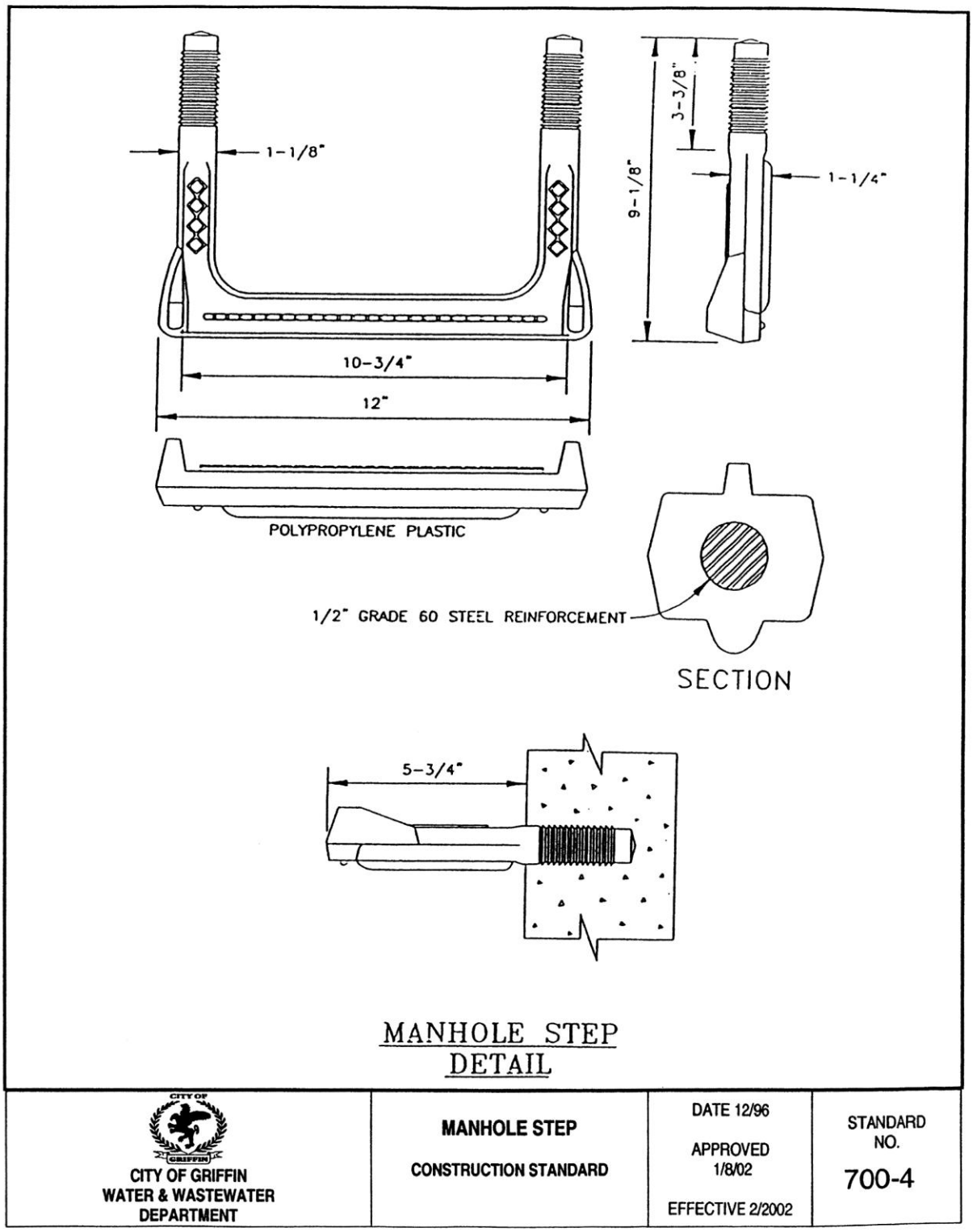

17. 5 MANHOLE STEP

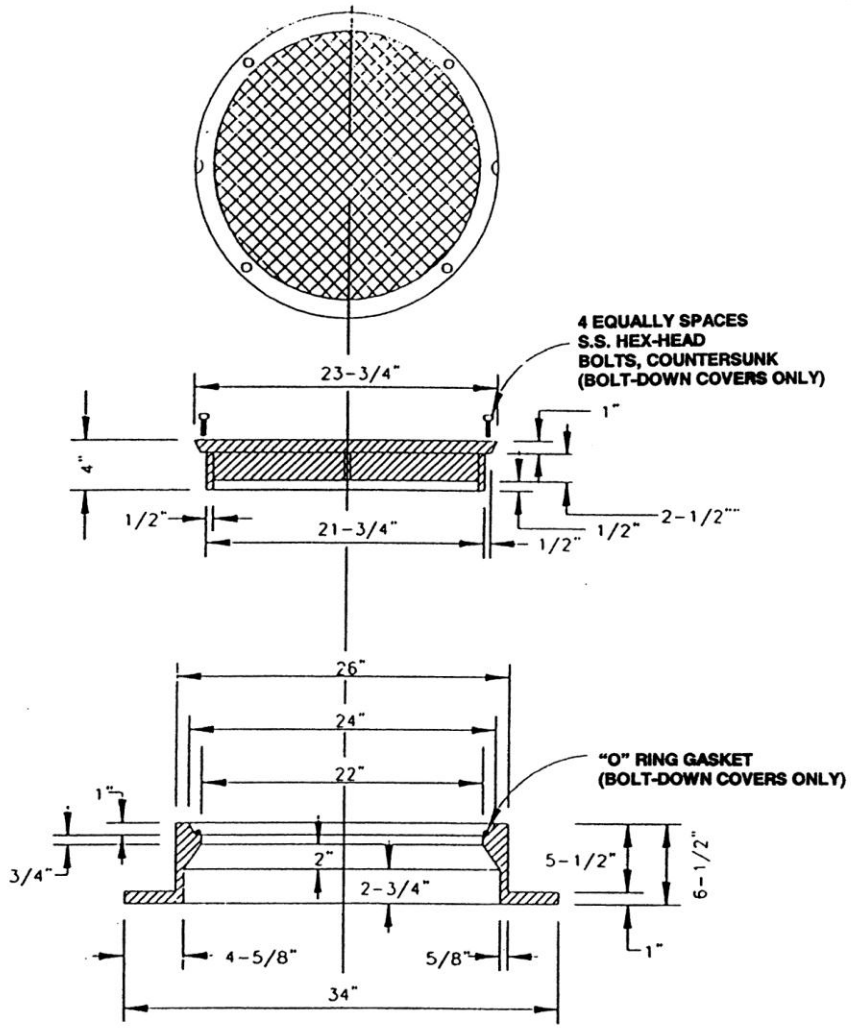

STANDARD MANHOLE
FRAME AND COVER

NOTES:

1. STANDARD MANHOLE FRAME AND COVER DOES NOT REQUIRE "O" RING GASKET AND BOLTS. ONLY BOLT-DOWN MANHOLE COVER REQUIRES "O" RING GASKET AND BOLTS.
2. BOLT-DOWN MANHOLE COVERS REQUIRED WHERE MANHOLES ARE LOCATED IN FLOOD PLAIN OR IN AREAS SUBJECT TO FLOODING.

CITY OF GRIFFIN WATER & WASTEWATER DEPARTMENT	STANDARD MANHOLE FRAME & COVER CONSTRUCTION STANDARD	DATE 12/96 APPROVED 1/8/02 EFFECTIVE 2/2002	STANDARD NO. 700-5

17. 6 STANDARD MANHOLE FRAME AND COVER

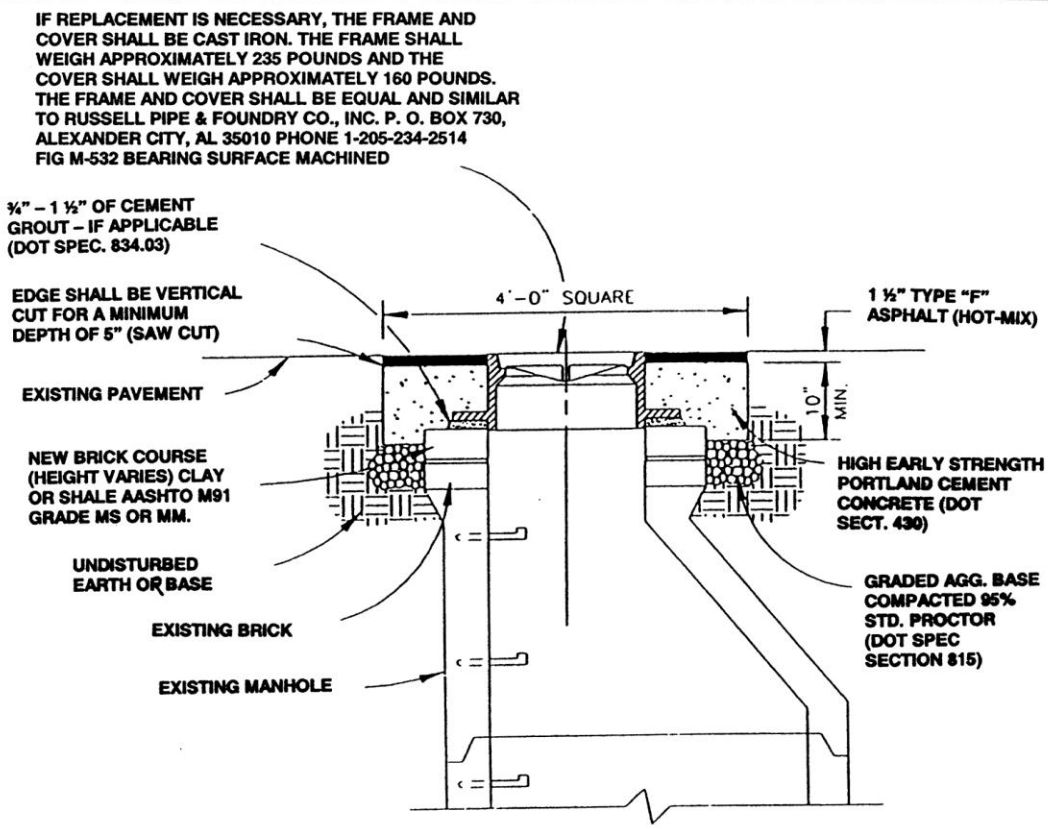

MANHOLE FRAME-GRADE ADJUSTMENT

NOTES:

1. PORTLAND CONCRETE FOR COLLAR SHALL BE A MIN. OF 10" THICK AND SHALL EXTEND FROM THE LAST FULL COURSE OF BRICK TO 1 ½" BELOW THE EXISTING PAVEMENT.
2. THE CONTRACTOR HAS THE OPTION OF USING PORTLAND CONCRETE FOR THE FULL DEPTH (FROM THE ASPHALT TO UNDISTURBED EARTH) OR AS SHOWN ABOVE.
3. THE CONCRETE SHALL BE LEFT WITH A RAKED FINISH TO PROVIDE A ROUGH SURFACE FOR THE ASPHALT TO BOND TO BITUMINOUS TACK AND ASPHALT SHALL BE PLACED PER CURRENT DOT SPECIFICATIONS.
4. STEEL PLATES MAY BE REQUIRED BY THE CITY IN HIGH TRAFFIC AREAS TO PROTECT THE FRESH CONCRETE FOR A MINIMUM OF 40 HOURS IN THESE HIGH TRAFFIC AREAS BARRICADES, CONES, ETC. WILL NOT BE ALLOWED.
5. BEFORE WORKING IN AN AREA, THE CONTRACTOR SHALL NOTIFY THE CITY.

CITY OF GRIFFIN WATER & WASTEWATER DEPARTMENT	MANHOLE FRAME GRADE ADJUSTMENT CONSTRUCTION STANDARD	DATE 12/96 APPROVED 1/8/02 EFFECTIVE 2/2002	STANDARD NO. 700-6

17. 7 MANHOLE FRAME GRADE ADJUSTMENT

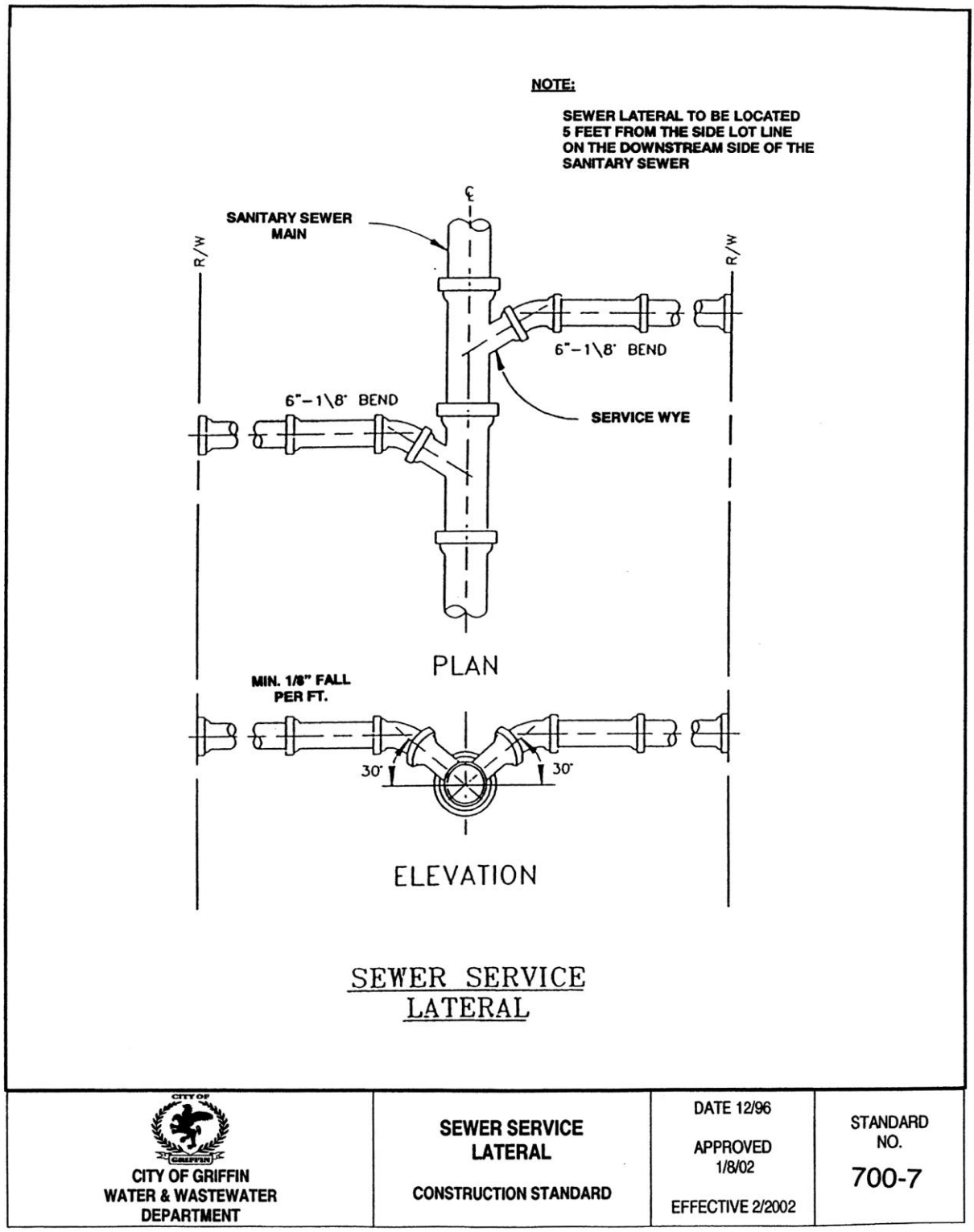

17. 8 SEWER SERVICE LATERAL

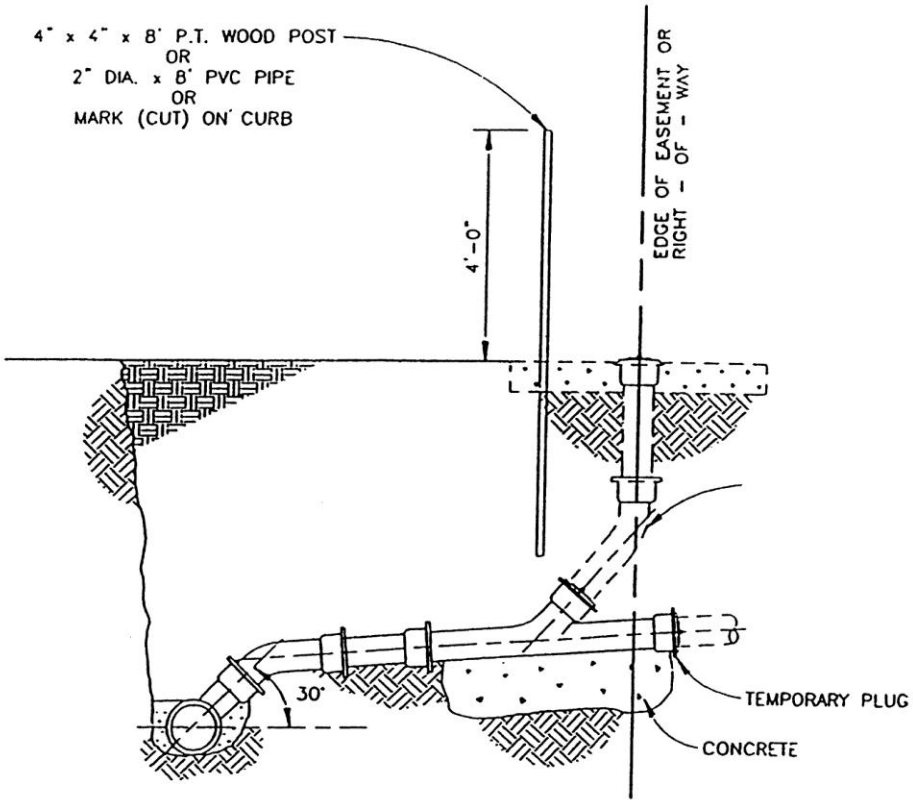

SANITARY
SEWER SERVICE
LOCATION DETAIL

CITY OF GRIFFIN WATER & WASTEWATER DEPARTMENT	SEWER SERVICE LOCATION DETAIL CONSTRUCTION STANDARD	DATE 12/96 APPROVED 1/8/02 EFFECTIVE 2/2002	STANDARD NO. 700-8

17. 9 SEWER SERVICE LOCATION DETAIL

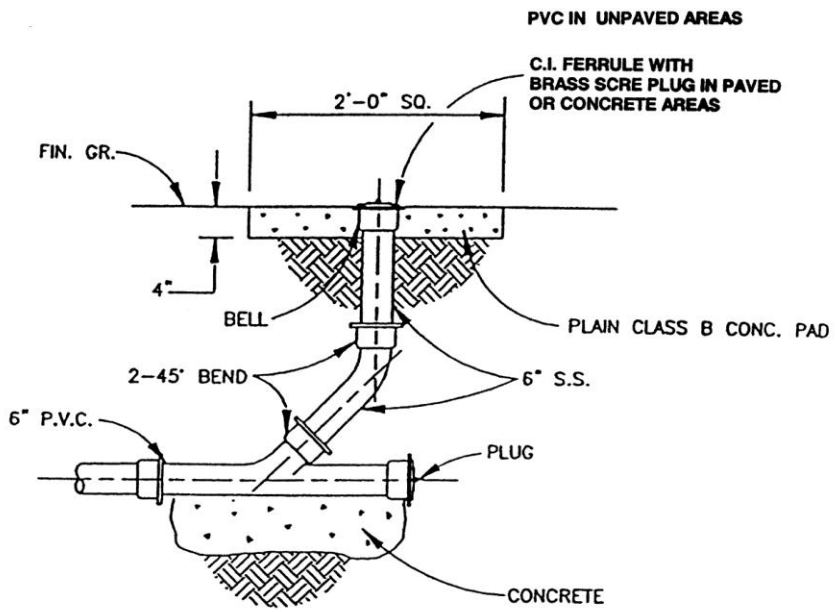

CLEANOUT DETAIL

CITY OF GRIFFIN WATER & WASTEWATER DEPARTMENT	CLEANOUT DETAIL CONSTRUCTION STANDARD	DATE 12/96 APPROVED 1/8/02 EFFECTIVE 2/2002	STANDARD NO. 700-9

17. 7 CLEANOUT DETAIL

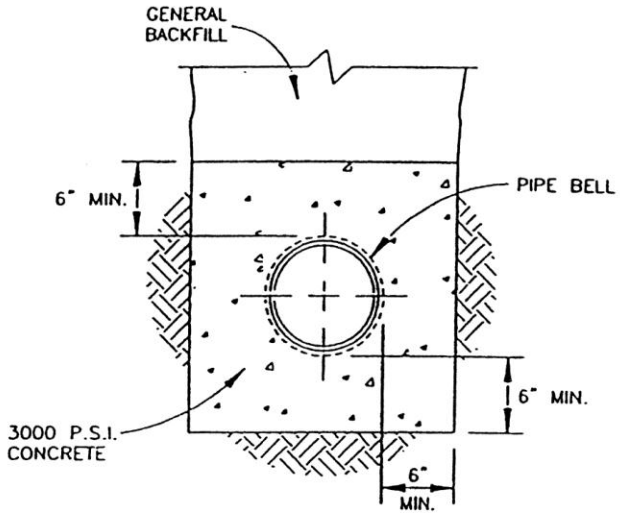

CONCRETE ENCASEMENT

CITY OF GRIFFIN WATER & WASTEWATER DEPARTMENT	CONCRETE ENCASEMENT CONSTRUCTION STANDARD	DATE 12/96 APPROVED 1/8/02 EFFECTIVE 2/2002	STANDARD NO. 700-10

17. 8 CONCRETE ENCASEMENT

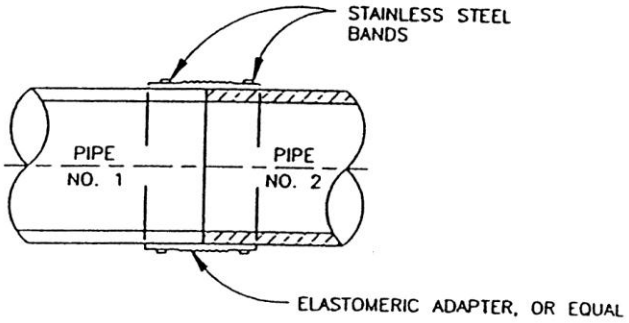

PIPE ADAPTER
JOINING DIFFERENT TYPES OF PIPE

CITY OF GRIFFIN WATER & WASTEWATER DEPARTMENT	TYPICAL PIPE ADAPTER CONSTRUCTION STANDARD	DATE 12/96 APPROVED 1/8/02 EFFECTIVE 2/2002	STANDARD NO. 700-11

17. 12 TYPICAL PIPE ADAPTER

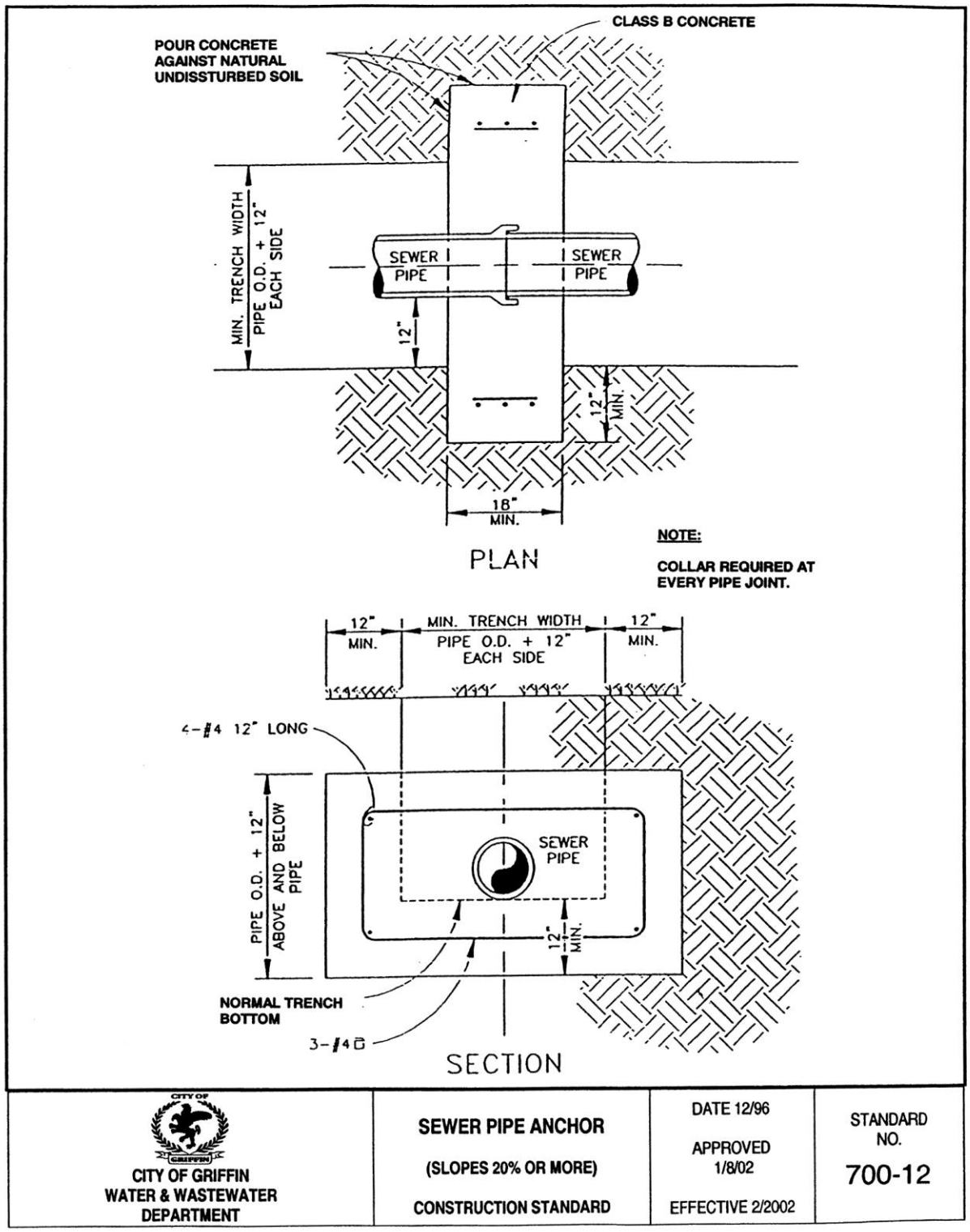

17. 9 SEWER PIPE ANCHOR

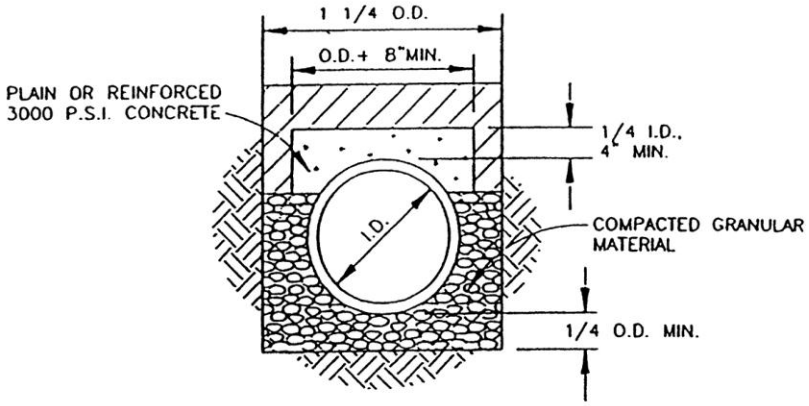

CONCRETE ARCH

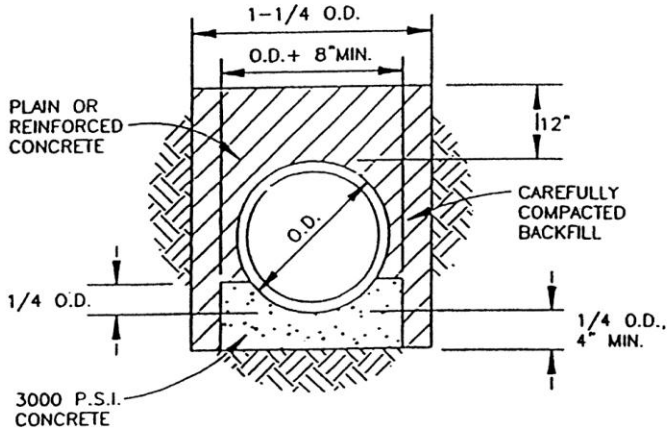

CONCRETE CRADLE

CITY OF GRIFFIN WATER & WASTEWATER DEPARTMENT	PIPE CLASS "A" BEDDING CONSTRUCTION STANDARD	DATE 12/96 APPROVED 1/8/02 EFFECTIVE 2/2002	STANDARD NO. 700-13

17. 14 PIPE CLASS "A" BEDDING

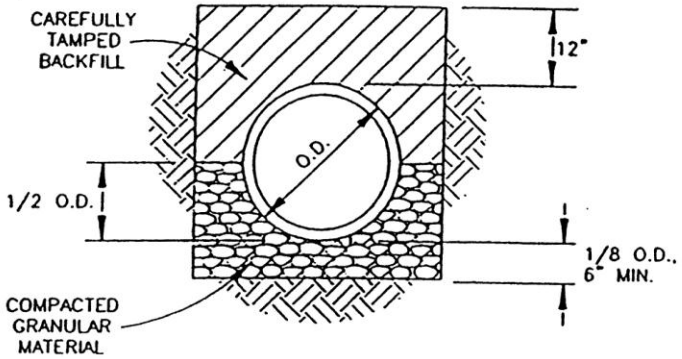

COMPACTED GRANULAR BEDDING
LOAD FACTOR 1.9

PIPE CLASS 'B' BEDDING

CITY OF GRIFFIN WATER & WASTEWATER DEPARTMENT	PIPE CLASS "B" BEDDING CONSTRUCTION STANDARD	DATE 12/96 APPROVED 1/8/02 EFFECTIVE 2/2002	STANDARD NO. 700-14

17. 15 PIPE CLASS "B" BEDDING

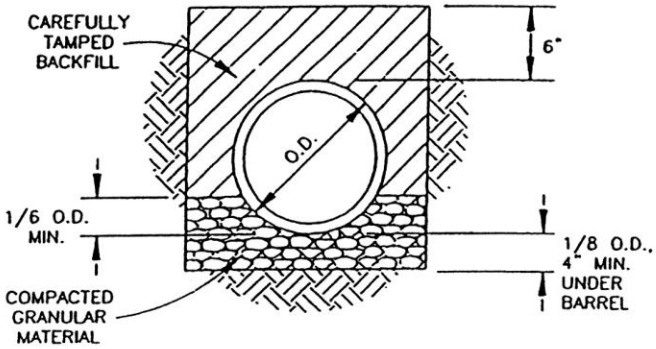

GRANULAR BEDDING
LOAD FACTOR 1.5

PIPE CLASS 'C' BEDDING

CITY OF GRIFFIN WATER & WASTEWATER DEPARTMENT	PIPE CLASS "C" BEDDING CONSTRUCTION STANDARD	DATE 12/96 APPROVED 1/8/02 EFFECTIVE 2/2002	STANDARD NO. 700-15

17. 16 PIPE CLASS "C" BEDDING

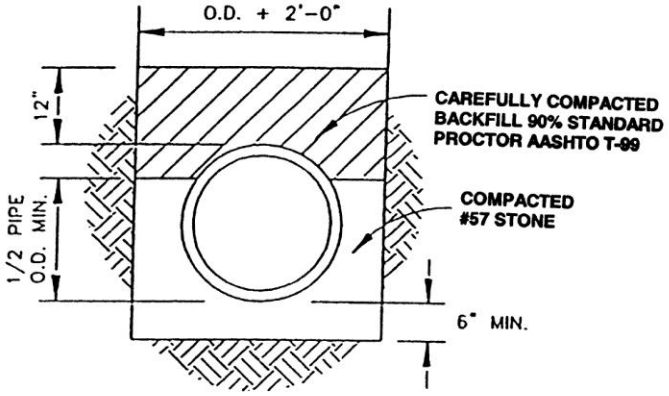

MINIMUM GRAVITY PVC SEWER
PIPE BEDDING DETAIL

NOTE:

IF P.V.C. SANITARY SEWER LINE IS CONSTRUCTED IN 100 YEAR FLOOD PLAIN OR BELOW GROUNDWWATER TABLE, COMPACTED #57 STONE IS REQUIRED TO 12" ABOVE TOP OF PIPE.

CITY OF GRIFFIN WATER & WASTEWATER DEPARTMENT	MINIMUM PVC PIPE BEDDING DETAIL CONSTRUCTION STANDARD	DATE 12/96 APPROVED 1/8/02 EFFECTIVE 2/2002	STANDARD NO. 700-16

17. 17 MINIMUM PVC PIPE BEDDING DETAIL

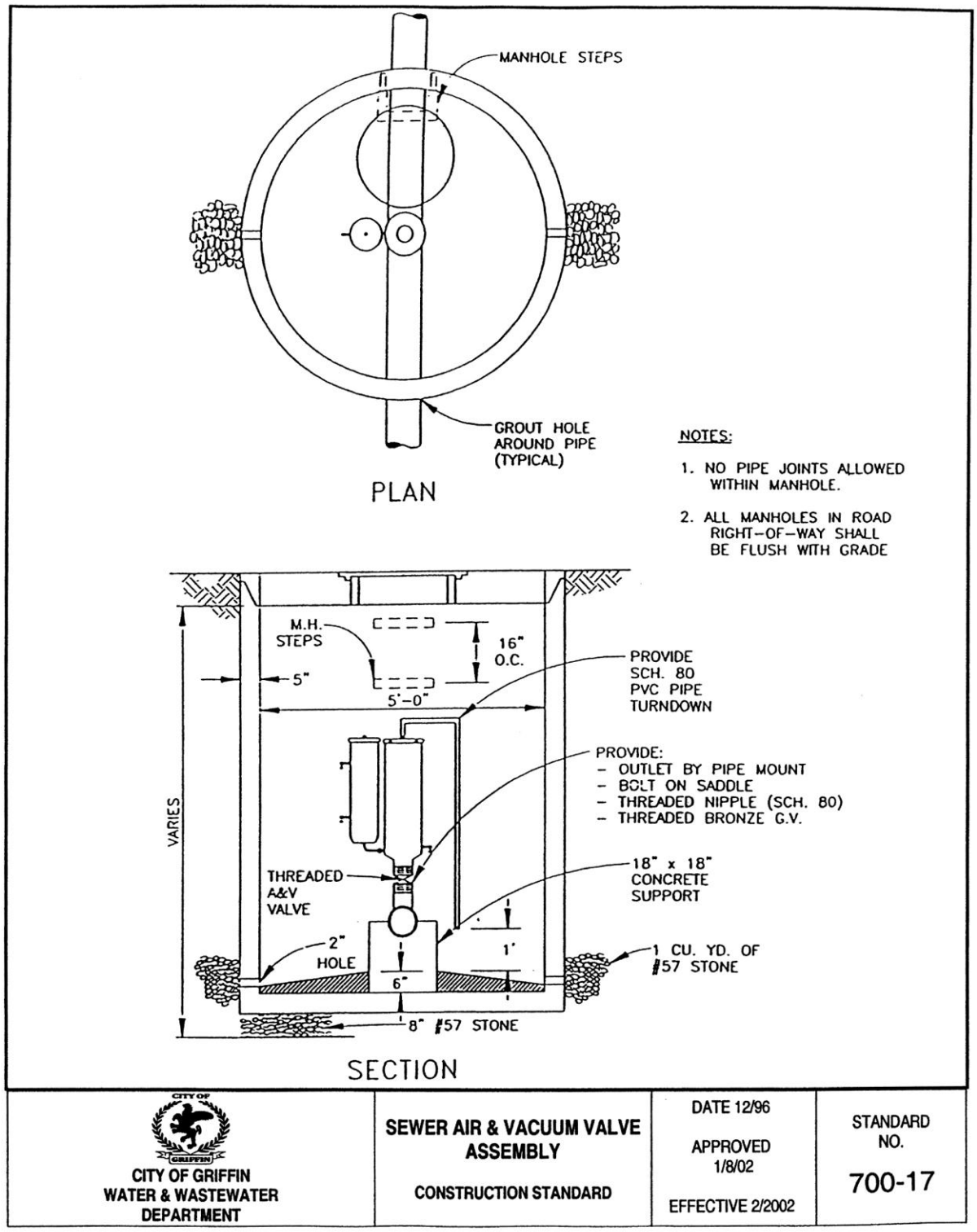

17. 18 SEWER AIR AND VACUUM VALVE ASSEMBLY

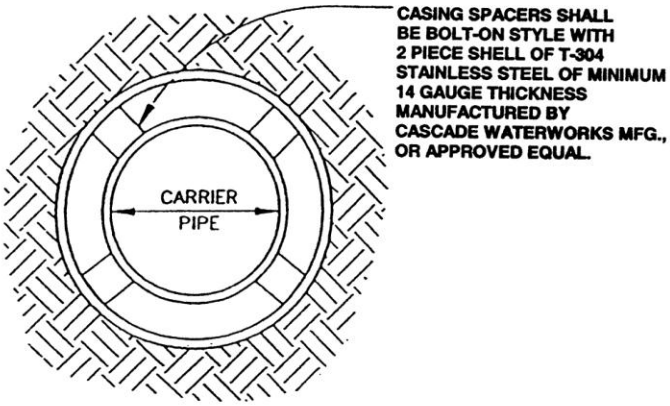

CASING SPACER DETAIL

CITY OF GRIFFIN WATER & WASTEWATER DEPARTMENT	SEWER CASING SPACER DETAIL CONSTRUCTION STANDARD	DATE 12/96 APPROVED 1/8/02 EFFECTIVE 2/2002	STANDARD NO. 700-18

17. 19 SEWER CASING SPACER DETAIL

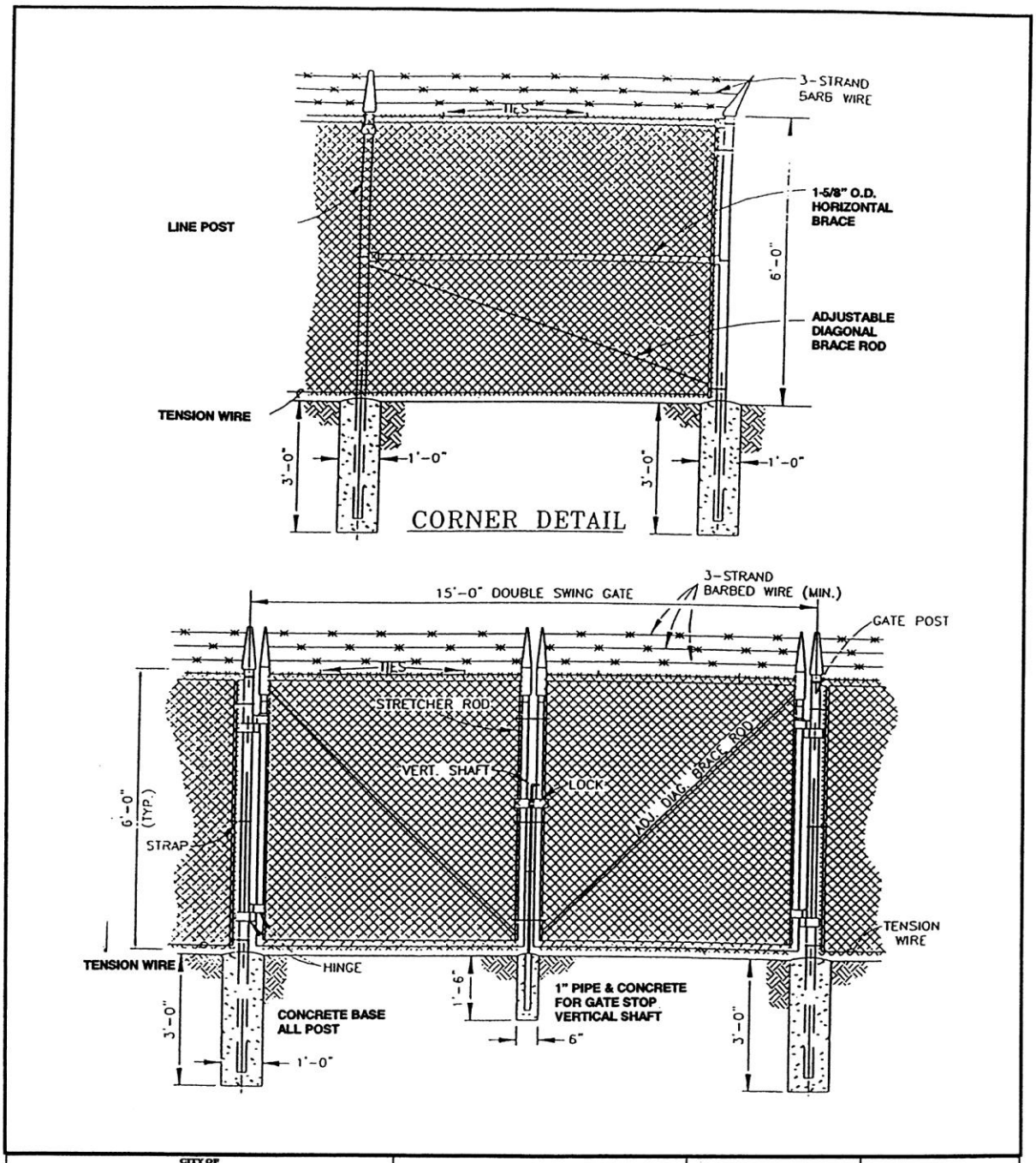

CITY OF GRIFFIN WATER & WASTEWATER DEPARTMENT	FENCE & GATE DETAIL CONSTRUCTION STANDARD	DATE 12/96 APPROVED 1/8/02 EFFECTIVE 2/2002	STANDARD NO. 700-19

17. 10 FENCE AND GATE DETAIL

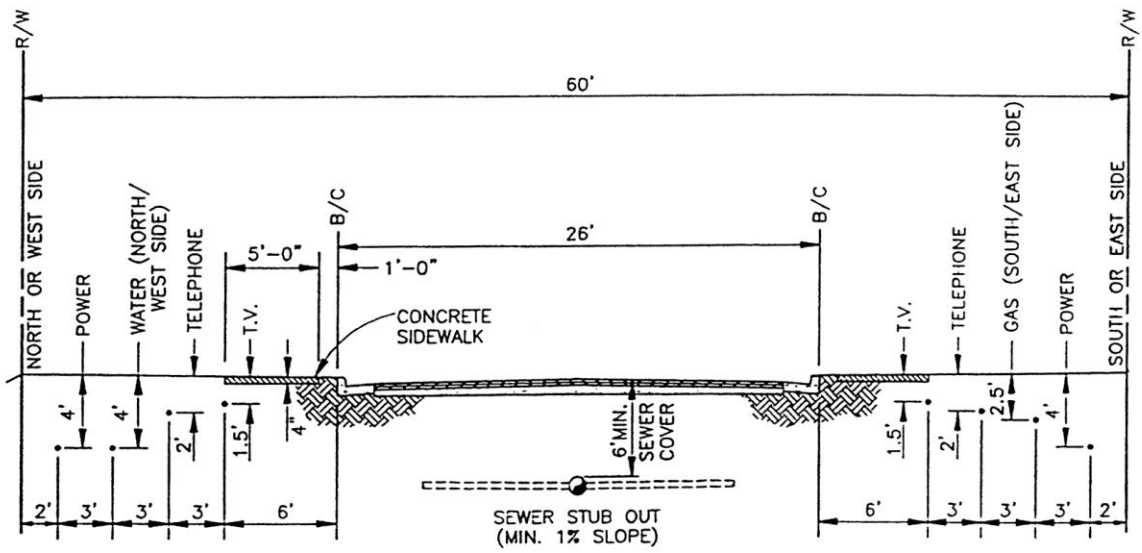

TYPICAL CROSS SECTION
RESIDENTIAL STREET
UTILITY LOCATION
60' R/W

CITY OF GRIFFIN WATER & WASTEWATER DEPARTMENT	RESIDENTIAL ST. UTILITY LOCATION (60' R/W) CONSTRUCTION STANDARD	DATE 12/96 APPROVED 1/8/02 EFFECTIVE 2/2002	STANDARD NO. 700-20

17. 11 RESIDENTIAL STREET UTILITY LOCATION

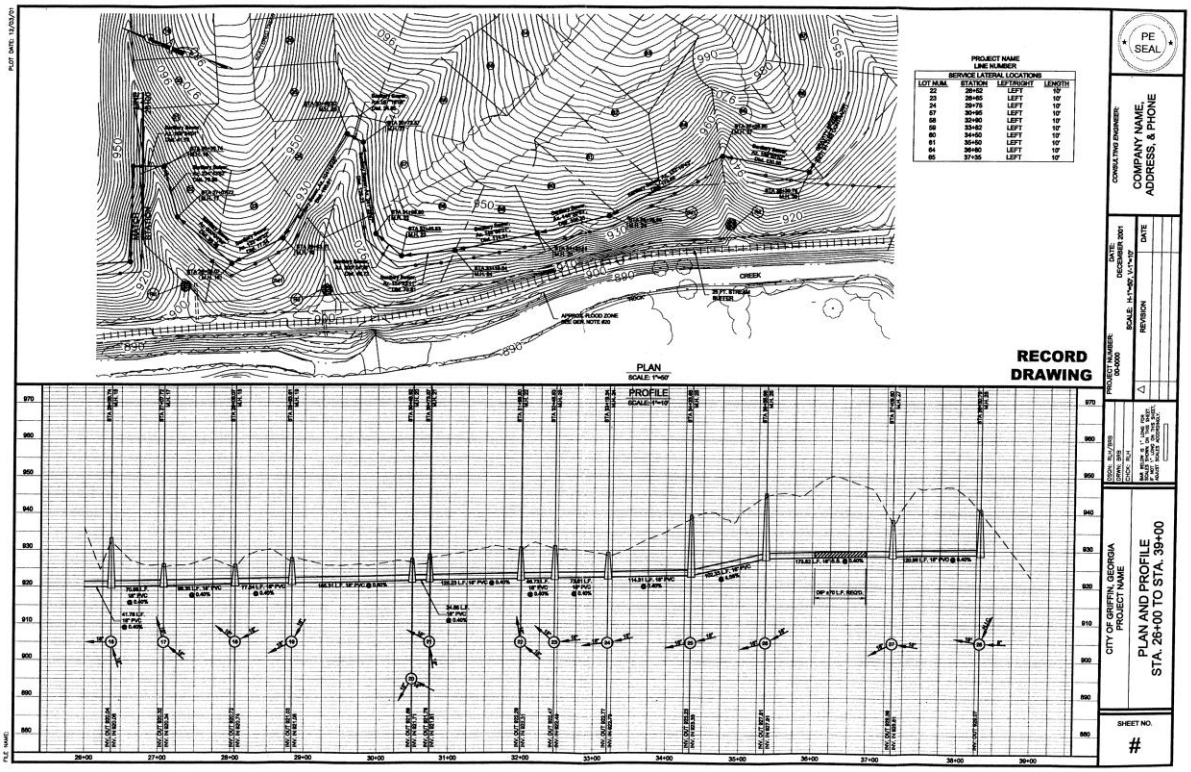

17. 12 PLAN AND PROFILE- SUBMITTAL EXAMPLE

Article 18. SOLID WASTE REQUIREMENTS AND SPECIFICATIONS

1801. GENERAL POLICY AND REQUIREMENTS

The City of Griffin's Solid Waste Department has the responsibility to protect the public health, safety and well-being of its citizens and to protect and enhance the quality of its environment by enforcing policies governing the collection, storage, handling and disposal of solid waste and construction and/or demolition debris as part of all new development within the City of Griffin including residential, commercial and industrial.

Therefore, the city has adopted procedures in accordance with laws enforced by the Georgia Environmental Protection Agency to regulate solid waste handling, storage, collection and disposal by the solid waste department, who is licensed to collect, store, handle and dispose of solid waste, commercial, and/or demolition debris generated from residential, commercial and industrial developments within the city.

1802. GENERAL REQUIREMENTS

1802 A. Prior to issuance of building permits for all construction including new or remodeling of residential, commercial or industrial sites, the applicant must provide documentation of the manner in which collection, storage and disposal of all building materials will be handled during construction. The director of solid waste or designee shall approve the proper location for the container. All residential and commercial contractors and/or property owners are required to keep the project site free of waste, debris and litter generated during new construction or remodeling.

1802 B. All commercial, industrial and multi-family generators of solid waste within the city are responsible for assuring the safe handling, storage and collection of solid waste from their premises. Commercial, industrial and multi-family customers are expected to enter into written service contracts with the city and abide by the regulations for such service as from time to time promulgated by the director of solid waste.

1802 C. Standardized commercial containers, including compactors and roll-off boxes, may be furnished by the City of Griffin Solid Waste Department. The solid waste department reserves the right to determine the location of each container, including the right to require joint usage by more than one customer where feasible. Customer-owned compactors are encouraged and the solid waste department can furnish specifications for installation of compactors compatible with city equipment. All new customers shall consult with the solid waste department in the design and development of commercial, industrial and multi-family sites to assure access and compatibility with city-owned equipment.

1802 D. It shall be the responsibility of each commercial, industrial and multi-family customer to provide adequate containers for storage of its own solid waste. It shall be the responsibility of each commercial, industrial and multi-family customer to provide a location easily accessible for the customer and the collection equipment utilized for disposal. The City of Griffin will not be responsible for deterioration of parking lots, driveways, streets or roads. The location of the permanent refuse container shall be detailed on the site plan in a location approved by the solid waste director or designee.

1802 E. For complete rules and regulations governing solid waste in the City of Griffin, please refer to the Code of Griffin, Georgia, Chapter 74.

1803. PLANNING AND DESIGN (GENERAL)

1803 A. All dumpsters and compactor sites shall contain the following:

1. Concrete pad.
2. Concrete approach pad.
3. Enclosure walls.
4. Gates with stops and locks.

1803 B. All front-loading refuse containers used in the city shall be equipped with waterproof covers and kept closed when not in use.

1803 C. Containers used for grocery stores, restaurants or other businesses that may generate food or liquid type waste shall be designed with seals, gaskets or plugs to prevent these waste materials from escaping or leaking from the container. The pad must be sloped to a central drain connected to the sanitary sewer system and kept clean at all times.

1803 D. All other container pads shall allow for positive drainage so that no standing water or sediment may accumulate.

1803 E. Container pads shall not be used for any outside storage. All grease traps, racks and other materials will not be allowed in container pad area.

1803 F. Container pads shall not be located adjacent to or over water lines, water meters, gas lines, gas meters, under electric lines or any other utility. Access to the container pad shall be limited in crossing all utilities.

1803 G. All commercial dumpsters and compactors shall bear the name, address, phone number and contact person of the contracting company for identification purposes.

1804. SINGLE-UNIT DESIGN

1804 A. Concrete pad shall be a minimum of eight feet in length by 12 feet in width, inside dimension, sloped for positive drainage capable of withstanding the front weight of a 60,000 pound front-end loading truck.

1804 B. Concrete approach pad shall be a minimum of 15 feet in length and 12 feet in width, inside dimension and constructed to hold a 60,000 pound front-end loading truck.

1804 C. Dumpster pad shall be enclosed on three sides with walls a minimum of six feet in height constructed of wood fence, masonry wall or non-transparent material compatible with the design, material and color selections used on the principal building(s).

1804 D. The front side of the dumpster shall have gates a minimum of six feet in height, constructed of wood, chain link fence with privacy inserts or metal. Gates and gateposts shall be constructed to prevent leaning or sagging. Foot rollers may be used in design to accomplish these criteria and to ensure gates are easy to open. Gates shall have stops and locks installed.

1804 E. Details of pad and enclosure are to be noted on site plans with "no vertical interference," statement on site plans.

1804 F. A minimum of two steel bollards set in concrete 48 inches on center (the distance from the center of one bollard to the center of the next bollard) shall be placed at the rear of the pad to prevent damage to the rear wall of the dumpster enclosure.

1804 G. Pad must be constructed for accessibility of front-end loading trucks, with no vertical interference entering or exiting proposed site.

1805. DOUBLE-UNIT DESIGN

1805 A. Concrete pad shall be a minimum of eight feet in length by 24 feet in width, inside dimension, sloped for positive drainage capable of withstanding a 60,000 pound front-end loading truck.

1805 B. Concrete approach pad shall be a minimum of 15 feet in length by 24 feet in width, inside dimension, and constructed to withstand a 60,000 pound front-end loading truck.

1805 C. Container area shall be enclosed on three sides with walls at least six feet in height constructed of wood fence, masonry wall or non-transparent material compatible with the design, material and color selections used on the principal building(s).

1805 D. The front side of the dumpster pad shall have gates with stops and locks at least six feet in height. Gates are to be constructed of wood, chain link fence with privacy inserts or metal. Gates and gateposts shall be constructed to prevent sagging and leaning and to be easily opened and closed.

1805 E. Details of the container pad and enclosure are to be noted on the site plan with "no vertical interference," statement on the plan.

1805 F. A minimum of four bollards spaced 47 inches on center (the distance from the center of one bollard to the center of the next bollard) for each pair. Bollards are to be set in concrete at rear of pad to prevent damage to the rear wall of the container enclosure.

1805 G. Pad must be constructed for accessibility of front-end loading trucks with no vertical interference entering or exiting the proposed site.

1805 H. Double unit may be designed with or without partition wall between containers.

1805 I. Double unit may have one or two pair of gates. If designed with one pair of gates then the foot rollers shall be installed.

1806. COMPACTOR DESIGN

1806 A. Concrete pad 36 feet in length by 12 feet in width, inside dimension, capable of holding a 60,000 pound roll-off truck.

1806 B. Concrete approach pad shall be 20 feet in length by 12 feet in width, inside dimension, capable of withstanding a 60,000 pound roll-off truck. Approach shall be straight to allow tandem truck to back into compactor pad.

1806 C. Compactor pad shall be enclosed on three sides with a wall height of a minimum of eight feet, constructed of a wood fence, masonry wall or non-transparent material compatible with the design, material and color selections used on the principal building(s).

1806 D. Compactor pad shall have gates with stops and locks. Gates shall be a minimum of eight feet in height. Gates and gateposts shall be constructed to prevent sagging and leaning and to be easily opened and closed. Foot rollers may be installed to accomplish these criteria.

1806 E. On commercial sites, walls may be omitted if unit design is self-contained with access to hopper from the interior of the building.

1806 F. For residential units, the enclosure walls at the hopper access shall be designed to prevent access by children and to prevent accidental injury. The area adjacent to the unit shall be no more than 42 inches to the access of the hopper.

1806 G. Electric shall be installed according to the manufacturer's specifications.

1806 H. Compactor pads shall allow for positive drainage to prevent the accumulation of standing water or sediment. A floor drain may be installed to permit stormwater drainage.

1806 I. Details of the compactor pad are to be noted on the site plan with "no vertical interference," statement on the plan.

1806 J. Hopper size shall be large enough to accommodate the volume of waste for which the container is designed to handle. Hoppers may require sides or tops depending on the application.

1806 K. The power unit, electric connection and hydraulic tank shall have easy access and be elevated to prevent water accumulation, which would interfere with safe operation of the compactor.

1806 L. The control unit shall be keyed and placed in an area of easy access for operation of the compactor. A sign with instructions and safety information shall be posted next to the control unit. A lock over the control unit shall be required for all residential complexes.

1806 M. Installation of a self-contained or stationary compactor shall be completed in accordance with the manufacturer's specifications.

1806 N. Any variance request from these requirements shall be placed in writing to the attention of the City of Griffin Solid Waste Director.

1807. INFORMATION

For further information regarding solid waste requirements for the City of Griffin, please contact:

Director, Solid Waste Department
132 Emlet Drive
Griffin, GA 30223
770-229-6421
(Ord. No. 03-17, § 1, 5-27-2003)

Article 19. LEGAL STATUS PROVISIONS

1901. CONFLICTING ORDINANCES REPEALED

All zoning and land development ordinances heretofore enacted by the City of Griffin, Georgia, are expressly hereby repealed. Chapter 12 of this ordinance now restates in its entirety the sign regulations codified at Chapter 70 of the Code of Griffin, Georgia, which Chapter shall now be shown to be "reserved". All other chapters of said Code, including those provisions which may address subject matters regulated by this ordinance, are saved from repeal. To the extent any Code provision, or provisions of other uncodified ordinance(s) conflict with any provision(s) of this ordinance the latest legislative pronouncement of the Board of Commissioners shall be deemed controlling.

1902. IMPLEMENTATION OF THE LAND USE PLAN

This Unified Development Code is intended to implement the current City of Griffin Comprehensive Plan. When the future land use element of the comprehensive plan is amended from time to time, this zoning ordinance shall be amended, as appropriate, within a reasonable period of time, in order to implement the amendment to the future land use element.

1903. VALIDITY

Should any part of this ordinance be declared by a court to be unconstitutional or invalid, such declaration shall not affect the validity of the ordinance as a whole or any part thereof other than the specific part so declared to be unconstitutional or invalid. It is intended the court shall sever from this ordinance only the unconstitutional or invalid part(s) in order to allow the remainder of this ordinance to be valid and enforceable.

1904. LIABILITY

It is the intent of this ordinance to protect the public health, life safety, morals and general welfare of persons and property within the City of Griffin in general and not to create any special duty or relationship with any individual person or to any specified property within or without the boundaries of said city. The city reserves the right to asset all available immunities and defenses in any action seeking equitable relief and/or to impose monetary damages upon the city, its officers, employees and agents arising out of any alleged failure or breach of duty or relationship as may now exist or hereafter be created. To the extent any federal or state law, regulation or ordinance requires compliance as a condition precedent to the issuance of any approval, permit, plan or design approval, inspection or other activity by the city, its officers, employees and agents, issuance of such permit, approval, plan or inspection shall not be deemed to constitute a waiver or estoppels of the condition precedent and it shall remain the sole obligation and responsibility of the owner, his design professional(s) and contractor(s) to satisfy such legal requirements.

1905. EFFECTIVE DATE

This ordinance, approved on second and final reading on March 13, 2012, shall become effective on April 1, 2012.

Appendix A: Acknowledgment Form

APPENDIX A
ACKNOWLEDGMENT FORM

The applicant for amendment to this ordinance shall sign the following statement or other similar statement approved by the zoning administrator:

"I, _____, applicant for amendment to the City of Griffin Unified Development Code, swear that all information in the application is true to the best of my knowledge and belief; and that I have had the opportunity to participate in a conference with the zoning administrator; that I have had an opportunity to read and/or purchase a copy of the Unified Development Code; that I agree to abide by the decisions of the zoning administrator, planning and zoning board, board of commissioners, as well as any other City Official or body relative to this application; and that I intend to complete any and all buildings or other improvements, as approved by the City of Griffin, in accordance with all City ordinances and in accordance with the plans and information submitted in this application."

This, the _____ day of _____, 20_____.

_____
Print Name

_____
Sign Name

Appendix B: Conflict of Interest Disclosure Affidavits

APPENDIX B
CONFLICT OF INTEREST
DISCLOSURE AFFIDAVITS

O.C.G.A. section 36-67A-4; any local government official knowingly failing to make a disclosure required by Code section 36-67A-2 shall be guilty of a misdemeanor. Any applicant for rezoning action knowingly failing to make and disclose as required by Code section 36-67A-3 shall be guilty of a misdemeanor.

Members of the board of board of commissioners and the planning and zoning board shall make and file an affidavit with the zoning administrator in any zoning matter in which the official (1) has a property interest in any real property affected by the rezoning; (2) has a financial interest in any business entity which has a property interest in any real property affected by the rezoning action upon which that official is authorized to vote; or (3) has a member of the family having an interest described above. For purposes of this requirement, members of the family shall include the official's spouse, father, mother, brother, sister, son or daughter. Affidavits shall be filed immediately upon learning that a rezoning action is pending. Officials making disclosure under this requirement shall exercise discretion in whether to participate in consideration of the rezoning action.

Applicants applying for a rezoning action, within ten days of filing of the application, shall file with the zoning administrator an affidavit disclosing whether, within two years immediately preceding the filing of said application, applicant has made campaign contributions or gifts totaling or having an aggregate value of $250.00 or more to a member of the board of board of commissioners or the planning and zoning board who is authorized to vote on the rezoning action. This disclosure shall state the name of the official, the amount and date of the campaign contribution or a description and estimate of value of any gift.

STATE OF GEORGIA
COUNTY OF SPALDING

DISCLOSURE STATEMENT

Re: Application of: _____
Real property located at: _____
Date of Application: _____
Disclosure filed by: _____
Title of local governing official: _____

For purposes of complying with the requirement of Georgia Laws 1986, page 1269 (O.C.G.A. 36-67A-2); the undersigned makes the following disclosures:

1. The undersigned (has or does not have) a property interest in the real property affected by the rezoning action upon which the undersigned is authorized to vote.
2. The undersigned (has or does not have) a financial interest in any business entity which has a property interest in the real property affected by the rezoning action upon which the undersigned is authorized to vote.
3. The undersigned (has or does not have) a family member having any property interest or financial interest in the real property affected by the rezoning action upon which the undersigned is authorized to vote.

EXPLAIN THE NATURE AND EXTENT OF ANY INTEREST DISCLOSED ABOVE IN THE SPACE BELOW:
_____

This, the _____ day of _____, _____.

_____
Local Governing Official

Sworn and subscribed before me this the _____ day of _____, _____.
Notary Public: _____
My commission expires: _____

CONFLICT OF INTEREST DISCLOSURE FOR APPLICANT

Have you, within the two years immediately preceding the filing of the rezoning application, made campaign contributions aggregating $250.00 or more to a member of the Board of Board of commissioners, a member of the Planning and Zoning Board or any other government official who will consider the application?

_____
Yes or No

If the answer is yes, please complete the following section:
Name and Official Position of Government Official:
_____

Please list the Date and the Amount of Contribution(s) (List all which aggregate to $250 or more):
_____
_____
_____
_____

Signature of Applicant
_____ Date _____
Printed Name:
_____

Signature of Applicant's Attorney or Representative
_____ Date _____
Printed Name:
_____